AGRIC
MAQUINARIA AGRÍCOLA

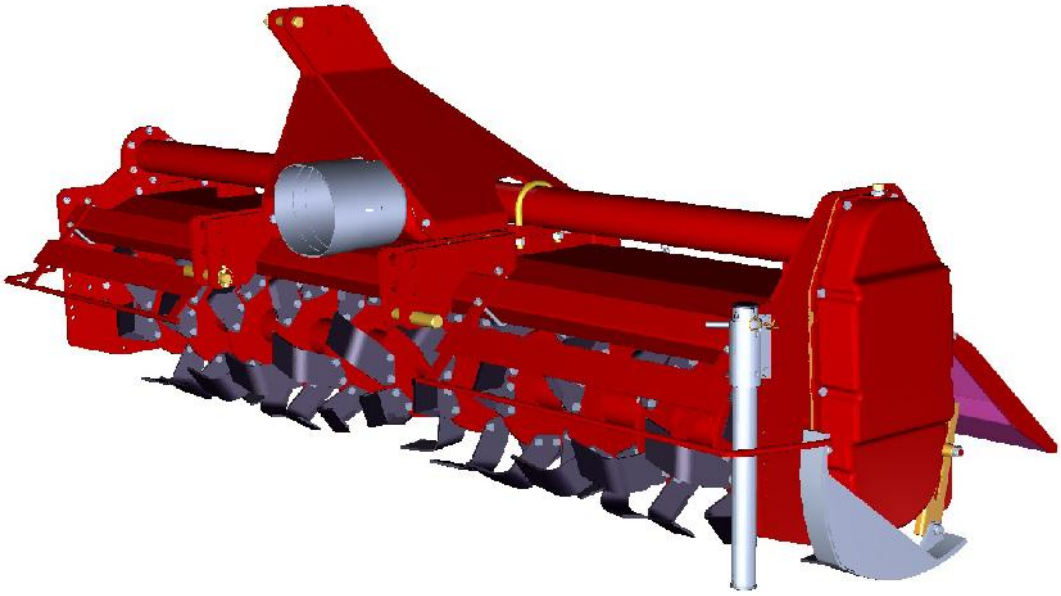

ROTOCULTIVADOR SERIE RZB

Rotocultivateur / Rotocultivator

Mod. **RZB-160 (60”)**
RZB-175 (65”)
RZB-185 (70”)
RZB-200 (75”)
RZB-210 (80”)
RZB-235 (85”)
RZB-260 (90”)
RZB-290 (100”)
RZB-300 (115”)
RZB-315 (120”)

Piezas de recambio
Piéce de rechange
Spare parts

AGRIC · BEMVIG SA

Carretera C-17, Km. 72.686
08508 MASIES DE VOLTREGÀ
BARCELONA – ESPAÑA
Telf.: 00 34 93 850 27 00
Fax.: 00 34 93 857 08 93
E-mail: info@agricbemvig.com

Délégation en France
AGRIC FRANCE SARL

Route de Perpignan (Sainte-Eugenie)
66270 LE SOLER-FRANCE
Tel: 04 68 92 77 13
Télécopie : 04 68 92 88 20

Bienvenido/a al manual de piezas de recambio de la **Rotocultivador RZB** para los modelos:

RZB-160 (60”), RZB-175 (65”), RZB-185 (70”), RZB-200 (75”), RZB-210 (80”),
RZB-235 (85”), RZB-260 (90”), RZB-290 (100”), RZB-300 (115”), RZB-315 (120”)

Aquí podrán encontrar los despieces de dicha máquina, con las correspondientes referencias, para así poder solicitar sus repuestos con total comodidad.

Esperamos con ello facilitar a nuestros clientes la sustitución de piezas dañadas.

Agradecemos una vez más su confianza en nuestra empresa.

Agric-Bemvig, S.A.

Bienvenus au manuel d'utilisation et pièces de rechange pour **Rotocultivateur RZB**:

RZB-160 (60”), RZB-175 (65”), RZB-185 (70”), RZB-200 (75”), RZB-210 (80”),
RZB-235 (85”), RZB-260 (90”), RZB-290 (100”), RZB-300 (115”), RZB-315 (120”)

Vous trouverez ci-après les vues éclatées des machines, avec les références correspondantes, pour faciliter l'identification des pièces usées et solliciter aisément leur remplacement.

Nous renouvelons nos remerciements pour la confiance que vous nous accordez.

Agric-Bemvig, S.A.

Welcome to **RZB Rotocultivator** spare parts book for models:

RZB-160 (60”), RZB-175 (65”), RZB-185 (70”), RZB-200 (75”), RZB-210 (80”),
RZB-235 (85”), RZB-260 (90”), RZB-290 (100”), RZB-300 (115”), RZB-315 (120”)

You will find exploded views for this machine, together with references, in order to help you to ask for your spare parts.

Our scope is to make our customers easy to change broken pieces.

Again, we appreciate your trust in our company.

Agric-Bemvig, S.A.

INDICE (Indice / Index)

TRANSMISIÓN Mod.100/1-SRM (Transmission / PTO shaft).....Pág. 3

TRANSMISIÓN Mod.B100-RB (Transmission / PTO shaft)..... Pág. 5

GRUPO (Groupe / Gear box).....Pág. 7

TRANSMISIÓN LATERAL Y ROTOR (Transmission lateral, rotor / Side transmission & rotor)....Pág. 9

CHASIS (Châssis / Frame)..……..……Pág.11

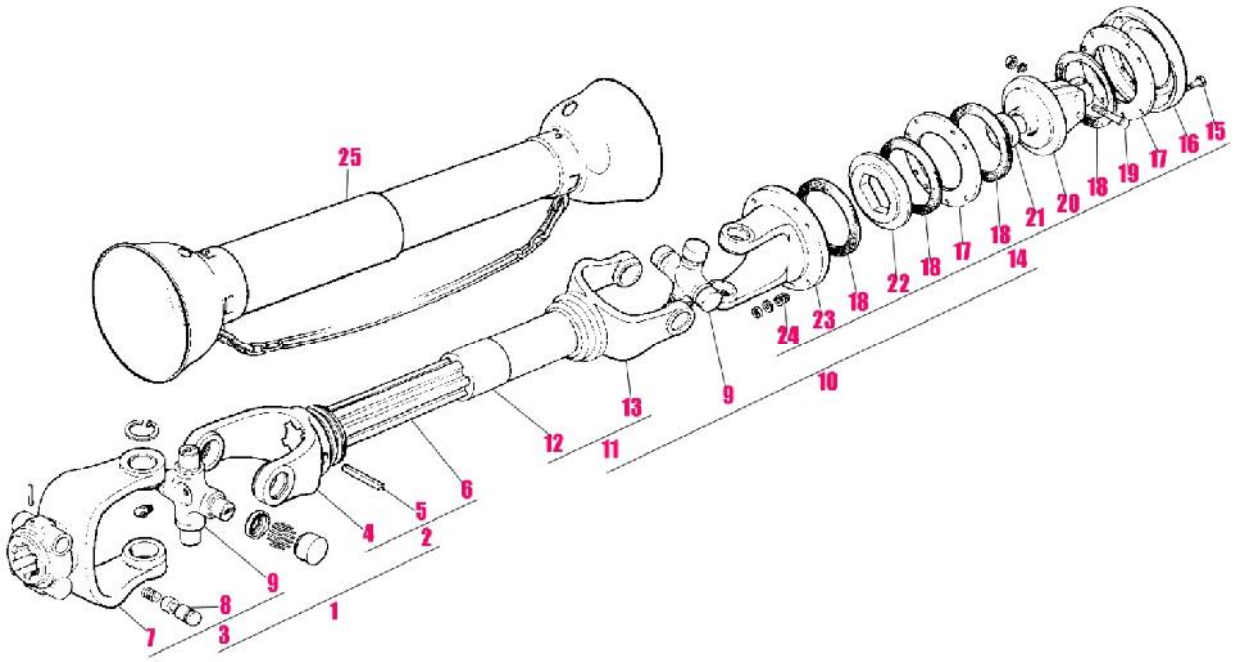

POS.	CODIGO	REF.	DESCRIPCIÓN	DESIGNATION	DESCRIPTION	MÁQ.	CANT.
0	04921004	100/1-SRM	Transmisión	Transmission	PTO shaft	60”-90”	1
1	04920018	100-SRM-1	Semi-transmisión	Semi-transmission	Semi-transmission		1
2	04920021	107-SRM	Semi-transmisión	Semi-transmission	Semi-transmission		1
3	04920034	100-SRM-3	Horquilla	Fourche	Coupling yoke		1
4	04903107	107-SRM-1	Horquilla	Fourche	Coupling yoke		1
5	04909596		Pasador 13 x 80	Goupille 13 x 80	Pin 13 x 80		2
6	04920047	107-SRM-2	Eje	Axe	Shaft		1
7	04900906	100-SRM-6	Horquilla	Fourche	Coupling yoke		1
8	04909486	100-AM-8	Pasador	Goupille	Pin		1
9	04901905	100-SRM-5	Cruceta	Croisillon	Spider		2
10	04921059	100/2-SRM-2	Semi-transmisión	Semi-transmission	Semi-transmission		1
11	04920063	105-SRM	Semi-transmisión	Semi-transmission	Semi-transmission		1
12	04909790	105-SRM-3	Manguito	Manchon	Bushing		1
13	04902108	105-SRM-1	Horquilla	Fourche	Coupling yoke		1
14	04933948	100/2-SRM-7	Embrague	Limiteur	Limiter		1
15	04909033		Tornillo M-10 x 100	Vis M-10x100	Screw M-10x100		8
16	04908021	142/1-AM	Tapa	Couvercle	Plate		1
17	04907022	152-AM	Disco	Plateau	Dish		1
18	04906023	144/1-AM	Ferodo	Disque garniture	Liner clutch		2
19	04909318		Tornillo M-12 x 70	Vis M-12x70	Screw M-12x70		2
20	04904054	140/1-SRM	Disco	Disque	Disc		1

POS.	CODIGO	REF.	DESCRIPCIÓN	DESIGNATION	DESCRIPTION	MÁQ.	CANT.
21	04909224	143/1-AM	Casquillo	-	-		1
22	04909813	160-SRM	Disco	Plateau	Dish		1
23	04905082	141-SRM	Horquilla	Fourche	Coupling yoke		1
24	04909130	145/1-AM	Muelle	Ressort	Spring		8
25	04610508	122-SRM	Protector	Protecteur	Shield		1

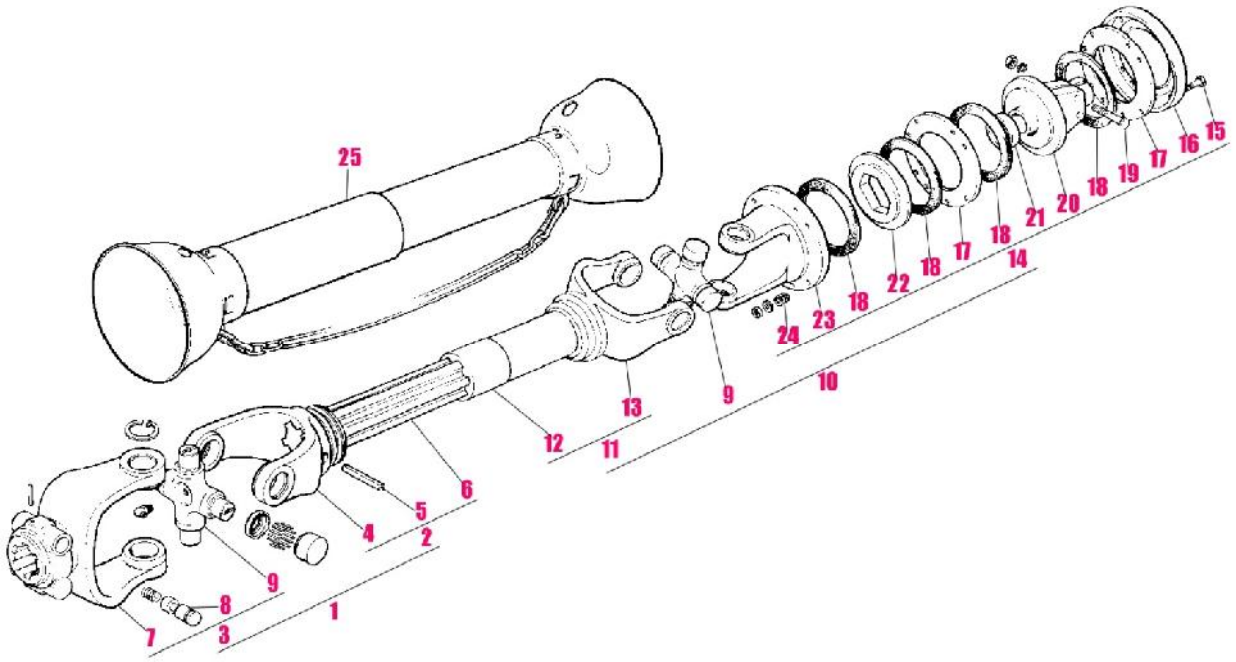

POS.	CODIGO	REF.	DESCRIPCIÓN	DESIGNATION	DESCRIPTION	MÁQ.	CANT.
0	04921046	100/6-SRM	Transmisión	Transmission	PTO shaft	100”-120”	1
1	04920018	100-SRM-1	Semi-transmisión	Semi-transmission	Semi-transmission		1
2	04920021	107-SRM	Semi-transmisión	Semi-transmission	Semi-transmission		1
3	04920034	100-SRM-3	Horquilla	Fourche	Coupling yoke		1
4	04903107	107-SRM-1	Horquilla	Fourche	Coupling yoke		1
5	04909596		Pasador 13 x 80	Goupille 13 x 80	Pin 13 x 80		2
6	04920047	107-SRM-2	Eje	Axe	Shaft		1
7	04900906	100-SRM-6	Horquilla	Fourche	Coupling yoke		1
8	04909486	100-AM-8	Pasador	Goupille	Pin		1
9	04901905	100-SRM-5	Cruceta	Croisillon	Spider		2
10	04921060	100/6-SRM-2	Semi-transmisión	Semi-transmission	Semi-transmission		1
11	04920064	105/6-SRM	Semi-transmisión	Semi-transmission	Semi-transmission		1
12	04909790	105-SRM-3	Manguito	Manchon	Bushing		1
13	04902108	105-SRM-1	Horquilla	Fourche	Coupling yoke		1
14	04933948	100/2-SRM-7	Embrague	Limiteur	Limiter		1
15	04909033		Tornillo M-10 x 100	Vis M-10x100	Screw M-10x100		8
16	04908021	142/1-AM	Tapa	Couvercle	Plate		1
17	04907022	152-AM	Disco	Plateau	Dish		1
18	04906023	144/1-AM	Ferodo	Disque garniture	Liner clutch		2
19	04909318		Tornillo M-12 x 70	Vis M-12x70	Screw M-12x70		2
20	04904054	140/1-SRM	Disco	Disque	Disc		1

POS.	CODIGO	REF.	DESCRIPCIÓN	DESIGNATION	DESCRIPTION	MÁQ.	CANT.
21	04909224	143/1-AM	Casquillo	-	-		1
22	04909813	160-SRM	Disco	Plateau	Dish		1
23	04905082	141-SRM	Horquilla	Fourche	Coupling yoke		1
24	04909130	145/1-AM	Muelle	Ressort	Spring		8
25	04610508	122-SRM	Protector	Protecteur	Shield		1

RZB-XXX BFAA00

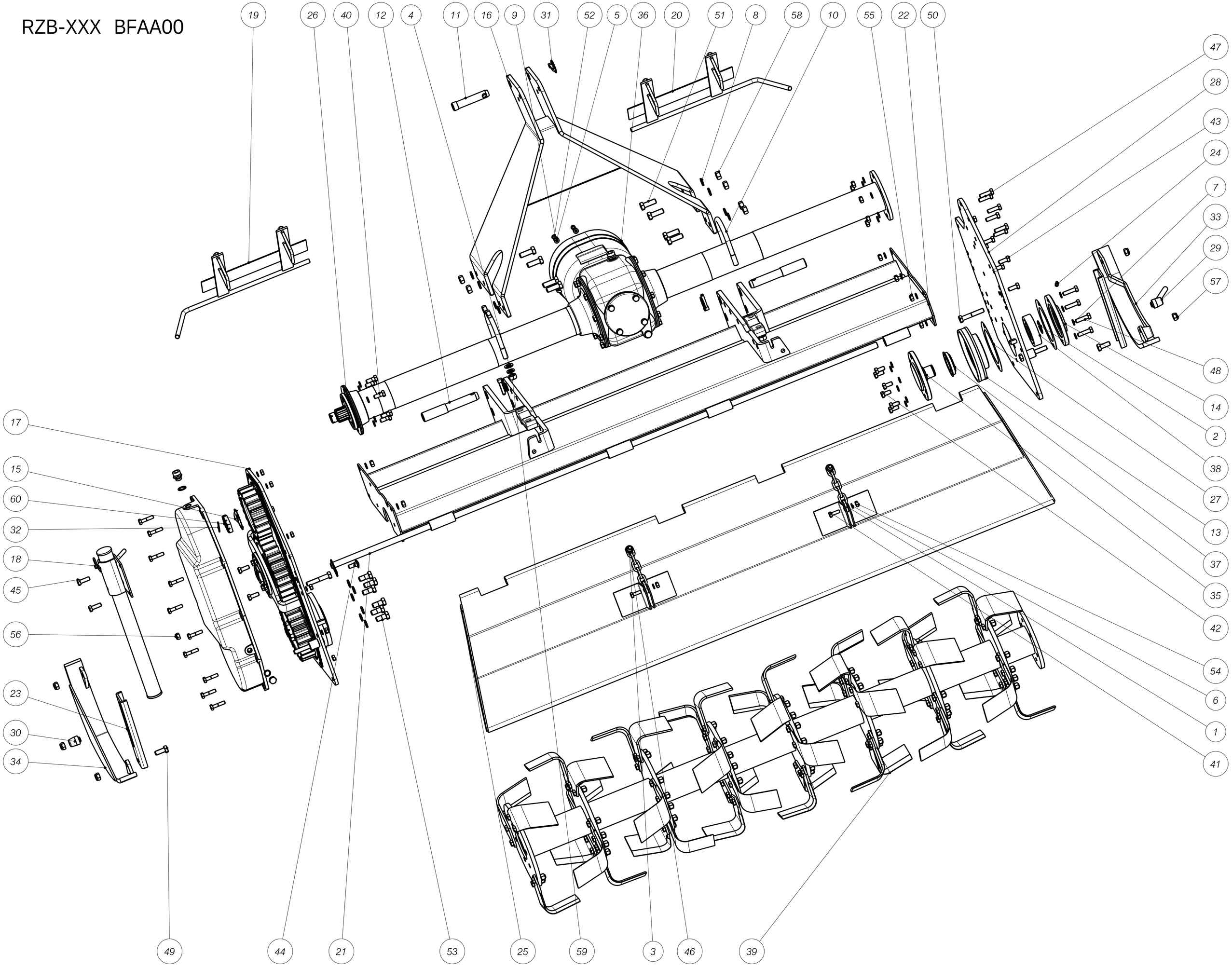

POS.	CÓDIGO	REFERENCIA	DESCRIPCIÓN	DESIGNATION	DESCRIPTION	MÁQ.	CANT.
1	03985108	422-AF	CADENA	CHAÎNE	28 CHAINLINKS CHAIN	RZB-135 ~ RZB-200	2
1	03985108	422-AF	CADENA	CHAÎNE	28 CHAINLINKS CHAIN	RZB-210 ~ RZB-315	4
2	04145307	LAE-E000-00040	ANILLO ELASTICO E-40	BAGUE ÉLASTIQUE E-40	RING PIN E-40		1
3	03800700	LAR-B125-00012	ARAND.PLANA DIN-125 12 ZBT	RONDELLE PLANE DIN-125 12	WASHER DIN-125 12	RZB-135 ~ RZB-200	2
3	03800700	LAR-B125-00012	ARAND.PLANA DIN-125 12 ZBT	RONDELLE PLANE DIN-125 12	WASHER DIN-125 12	RZB-210 ~ RZB-315	4
4	03800904	LAR-B125-00016	ARAND.PLANA DIN-125 16 ZBT	RONDELLE PLANE DIN-125 16	WASHER DIN-125 16		4
5	03800506	LAR-B125-00008	ARAND.PLANA DIN-125 8 ZBT	RONDELLE PLANE DIN-125 8	WASHER DIN-125 8		2
6	03820401	LAR-0127-00010	ARAND.GROWER DIN-127 10 ZBT	RONDELLE GROWER DIN-127 10	GROWER WASHER DIN-127 10	RZB-135 ~ RZB-200	2
6	03820401	LAR-0127-00010	ARAND.GROWER DIN-127 10 ZBT	RONDELLE GROWER DIN-127 10	GROWER WASHER DIN-127 10	RZB-210 ~ RZB-315	4
7	03820508	LAR-0127-00012	ARAND.GROWER DIN-127 12 ZBT	RONDELLE GROWER DIN-127 12	GROWER WASHER DIN-127 12	RZB-135 ~ RZB-200	34
7	03820508	LAR-0127-00012	ARAND.GROWER DIN-127 12 ZBT	RONDELLE GROWER DIN-127 12	GROWER WASHER DIN-127 12	RZB-210 ~ RZB-315	36
8	03820702	LAR-0127-00016	ARAND.GROWER DIN-127 16 ZBT	RONDELLE GROWER DIN-127 16	GROWER WASHER DIN-127 8		18
9	03820304	LAR-0127-00008	ARAND.GROWER DIN-127 8 ZBT	RONDELLE GROWER DIN-127 8	GROWER WASHER 8		2
10	11223205	374-SRG	BRIDA	BRIDE	FIXING FLANGE		2
11	11100306	230-BCD	BULON ENGANCHE	BOULON ATTELAGE	COUPLING PIN		1
12	11100908	380-B	BULON ENGANCHE	BOULON ATTELAGE	COUPLING PIN		2
13	10602016	334/2-HM	CAJERA RODAMIENTO	LOGEMENT ROULEMENT	BEARING SLEEVE		1
14	10602702	338/1-HM	CAJERA COJINETE	LOGEMENT ROULEMENT	BEARING SLEEVE		1
15	10341104	254-BM	CHAPA DE SEGURIDAD	TÔLE DE SÛRETÉ	SAFETY PLATE		1
16	300029403	RTB-2330-00000	CONJUNTO ENGANCHE	ENSEMBLE ATTELAGE	COUPLING		1
17	400034184	RZB-3010-00050	CONJUNTO LATERAL IZQUIERDO	ENSEMBLE LATERAL GAUCHE	LEFT SIDE SET		1
18	400034184	RTB-5030-00050	CONJUNTO PIE	ENSEMBLE PIED	COUPLING STAND		1
19	400034508	RTB-3400-04550	PROTECTOR DERECHA	PROTECTEUR DROITE SET 135	RIGHT PROTECTION SET 135	RZB-135 (50)	1
19	400034511	RTB-3400-05050	PROTECTOR DERECHA	PROTECTEUR DROITE SET 150-160	RIGHT PROTECTION SET 150-160	150-160	1
19	400034493	RTB-3400-05550	PROTECTOR DERECHA	PROTECTEUR DROITE SET 175-200	RIGHT PROTECTION SET 175-200	RZB-175 - 185 - 200	1
19	400034494	RTB-3400-06550	PROTECTOR DERECHA	PROTECTEUR DROITE SET 210 235	RIGHT PROTECTION SET 210-235	RZB-210 - 225 - 235	1
19	400034495	RTB-3400-07550	PROTECTOR DERECHA	PROTECTEUR DROITE SET 260	RIGHT PROTECTION SET 260	RZB-260 (100)	1
19	400034518	RTB-3400-08050	PROTECTOR DERECHA	PROTECTEUR DROITE SET 290-315	RIGHT PROTECTION SET 290-315	RZB-290 - 300 - 315	1
20	400034507	RTB-3390-04550	PROTECTOR IZQUIERDA	PROTECTEUR GAUCHE SET 135	LEFT PROTECTION SET 135	RZB-135 (50)	1
20	400034510	RTB-3390-05050	PROTECTOR IZQUIERDA	PROTECTEUR GAUCHE SET 150-160	LEFT PROTECTION SET 150-160	RZB-150 -160	1
20	400034489	RTB-3390-05550	PROTECTOR IZQUIERDA	PROTECTEUR GAUCHE SET 175-200	LEFT PROTECTION SET 175-200	RZB-175 - 185 - 200	1
20	400034490	RTB-3390-06550	PROTECTOR IZQUIERDA	PROTECTEUR GAUCHE SET 210-235	LEFT PROTECTION SET 210-235	RZB-210 - 225 - 235	1
20	400034491	RTB-3390-07550	PROTECTOR IZQUIERDA	PROTECTEUR GAUCHE SET 260	LEFT PROTECTION SET 260	RZB-260 (100)	1
20	400034517	RTB-3390-08050	PROTECTOR IZQUIERDA	PROTECTEUR GAUCHE 290-315	LEFT PROTECTION SET 290-315	RZB-290 - 300 - 315	1
21	300034797	RTB-4020-05000	CONJUNTO VARILLA FALDON	AXE CHARNIÈRE	HINGE PIN	RZB-135 (50)	1
21	300034798	RTB-4020-05500	CONJUNTO VARILLA FALDON	AXE CHARNIÈRE	HINGE PIN	RZB-150 (55)	1
21	300034799	RTB-4020-06000	CONJUNTO VARILLA FALDON	AXE CHARNIÈRE	HINGE PIN	RZB-160 (60)	1
21	300034800	RTB-4020-06500	CONJUNTO VARILLA FALDON	AXE CHARNIÈRE	HINGE PIN	RZB-175 (65)	1
21	300034801	RTB-4020-07000	CONJUNTO VARILLA FALDON	AXE CHARNIÈRE	HINGE PIN	RZB-185 (70)	1
21	300034802	RTB-4020-07500	CONJUNTO VARILLA FALDON	AXE CHARNIÈRE	HINGE PIN	RZB-200 (75)	1
21	300034803	RTB-4020-08000	CONJUNTO VARILLA FALDON	AXE CHARNIÈRE	HINGE PIN	RZB-210 (80)	1
21	300034804	RTB-4020-08500	CONJUNTO VARILLA FALDON	AXE CHARNIÈRE	HINGE PIN	RZB-225 (85)	1
21	300034805	RTB-4020-09000	CONJUNTO VARILLA FALDON	AXE CHARNIÈRE	HINGE PIN	RZB-235 (90)	1
21	300034807	RTB-4020-10000	CONJUNTO VARILLA FALDON	AXE CHARNIÈRE	HINGE PIN	RZB-260 (100)	1
21	300034809	RTB-4020-11000	CONJUNTO VARILLA FALDON	AXE CHARNIÈRE	HINGE PIN	RZB-290 (110)	1

POS.	CÓDIGO	REFERENCIA	DESCRIPCIÓN	DESIGNATION	DESCRIPTION	MÁQ.	CANT.
21	300034810	RTB-4020-11500	CONJUNTO VARILLA FALDON	AXE CHARNIÈRE	HINGE PIN	RZB-300 (115)	1
21	300034811	RTB-4020-12000	CONJUNTO VARILLA FALDON	AXE CHARNIÈRE	HINGE PIN	RZB-315 (120)	1
22	300033611	RTB-4010-05000	CORAZA	CUIRASSE	CASSING	RZB-135 (50)	1
22	300033612	RTB-4010-05500	CORAZA	CUIRASSE	CASSING	RZB-150 (55)	1
22	300033613	RTB-4010-06000	CORAZA	CUIRASSE	CASSING	RZB-160 (60)	1
22	300033614	RTB-4010-06500	CORAZA	CUIRASSE	CASSING	RZB-175 (65)	1
22	300033615	RTB-4010-07000	CORAZA	CUIRASSE	CASSING	RZB-185 (70)	1
22	300033616	RTB-4010-07500	CORAZA	CUIRASSE	CASSING	RZB-200 (75)	1
22	300033617	RTB-4010-08000	CORAZA	CUIRASSE	CASSING	RZB-210 (80)	1
22	300033618	RTB-4010-08500	CORAZA	CUIRASSE	CASSING	RZB-225 (85)	1
22	300033619	RTB-4010-09000	CORAZA	CUIRASSE	CASSING	RZB-235 (90)	1
22	300033620	RTB-4010-10000	CORAZA	CUIRASSE	CASSING	RZB-260 (100)	1
22	300033621	RTB-4010-11000	CORAZA	CUIRASSE	CASSING	RZB-290 (110)	1
22	300033622	RTB-4010-11500	CORAZA	CUIRASSE	CASSING	RZB-300 (115)	1
22	300033623	RTB-4010-12000	CORAZA	CUIRASSE	CASSING	RZB-315 (120)	1
23	12202209	423-RB	CREMALLERA	CRÉMAILLÈRE	RACK		2
24	04800103	LER-0000-10010	ENGRASADOR RECTO M10-100	GRAISSEUR DROITE M10-100	STRAIGHT LUBRICATOR M10-100		1
25	300034046	RTB-4030-05000	FALDON	TABLIER	TRAILING BOARD	RZB-135 (50)	1
25	300034047	RTB-4030-05500	FALDON	TABLIER	TRAILING BOARD	RZB-150 (55)	1
25	300034048	RTB-4030-06000	FALDON	TABLIER	TRAILING BOARD	RZB-160 (60)	1
25	300034049	RTB-4030-06500	FALDON	TABLIER	TRAILING BOARD	RZB-175 (65)	1
25	300034050	RTB-4030-07000	FALDON	TABLIER	TRAILING BOARD	RZB-185 (70)	1
25	300034051	RTB-4030-07500	FALDON	TABLIER	TRAILING BOARD	RZB-200 (75)	1
25	300034102	RTB-4030-08000	FALDON	TABLIER	TRAILING BOARD	RZB-210 (80)	1
25	300034121	RTB-4030-08500	FALDON	TABLIER	TRAILING BOARD	RZB-225 (85)	1
25	300034122	RTB-4030-09000	FALDON	TABLIER	TRAILING BOARD	RZB-235 (90)	1
25	300034123	RTB-4030-10000	FALDON	TABLIER	TRAILING BOARD	RZB-260 (100)	1
25	300034124	RTB-4030-11000	FALDON	TABLIER	TRAILING BOARD	RZB-290 (110)	1
25	300034125	RTB-4030-11500	FALDON	TABLIER	TRAILING BOARD	RZB-300 (115)	1
25	300034126	RTB-4030-12000	FALDON	TABLIER	TRAILING BOARD	RZB-315 (120)	1
26	300034129	RTB-4040-08000	FALDON	TABLIER	TRAILING BOARD	RZB-210 (80)	1
26	300034138	RTB-4040-08500	FALDON	TABLIER	TRAILING BOARD	RZB-225 (85)	1
26	300034139	RTB-4040-09000	FALDON	TABLIER	TRAILING BOARD	RZB-235 (90)	1
26	300034140	RTB-4040-10000	FALDON	TABLIER	TRAILING BOARD	RZB-260 (100)	1
26	300034141	RTB-4040-11000	FALDON	TABLIER	TRAILING BOARD	RZB-290 (110)	1
26	300034142	RTB-4040-11500	FALDON	TABLIER	TRAILING BOARD	RZB-300 (115)	1
26	300034143	RTB-4040-12000	FALDON	TABLIER	TRAILING BOARD	RZB-315 (120)	1
27	400033627	RTB-2000-05050	CONJ. GRUP. TROMP.	ENSEMBLE GROUPE TROMPETTE	TORQUE TUBE GROUP SET	RZB-135 (50)	1
27	400033628	RTB-2000-05550	CONJ. GRUP. TROMP.	ENSEMBLE GROUPE TROMPETTE	TORQUE TUBE GROUP SET	RZB-150 (55)	1
27	400033629	RTB-2000-06050	CONJ. GRUP. TROMP.	ENSEMBLE GROUPE TROMPETTE	TORQUE TUBE GROUP SET	RZB-160 (60)	1
27	400033630	RTB-2000-06550	CONJ. GRUP. TROMP.	ENSEMBLE GROUPE TROMPETTE	TORQUE TUBE GROUP SET	RZB-175 (65)	1
27	400033631	RTB-2000-07050	CONJ. GRUP. TROMP.	ENSEMBLE GROUPE TROMPETTE	TORQUE TUBE GROUP SET	RZB-185 (70)	1
27	400033632	RTB-2000-07550	CONJ. GRUP. TROMP.	ENSEMBLE GROUPE TROMPETTE	TORQUE TUBE GROUP SET	RZB-200 (75)	1
27	400033633	RTB-2000-08050	CONJ. GRUP. TROMP.	ENSEMBLE GROUPE TROMPETTE	TORQUE TUBE GROUP SET	RZB-210 (80)	1
27	400033701	RTB-2000-08550	CONJ. GRUP. TROMP.	ENSEMBLE GROUPE TROMPETTE	TORQUE TUBE GROUP SET	RZB-225 (85)	1

POS.	CÓDIGO	REFERENCIA	DESCRIPCIÓN	DESIGNATION	DESCRIPTION	MÁQ.	CANT.
27	400033634	RTB-2000-09050	CONJ. GRUP. TROMP.	ENSEMBLE GROUPE TROMPETTE	TORQUE TUBE GROUP SET	RZB-235 (90)	1
27	400034289	RTB-2000-10050	CONJ. GRUP. TROMP.	ENSEMBLE GROUPE TROMPETTE	TORQUE TUBE GROUP SET	RZB-260 (100)	1
27	400034290	RTB-2000-11050	CONJ. GRUP. TROMP.	ENSEMBLE GROUPE TROMPETTE	TORQUE TUBE GROUP SET	RZB-290 (110)	1
27	400034291	RTB-2000-11550	CONJ. GRUP. TROMP.	ENSEMBLE GROUPE TROMPETTE	TORQUE TUBE GROUP SET	RZB-300 (115)	1
27	400034292	RTB-2000-12050	CONJ. GRUP. TROMP.	ENSEMBLE GROUPE TROMPETTE	TORQUE TUBE GROUP SET	RZB-315 (120)	1
28	03955105	336/1-HM	JUNTA	JOINT	GASKET		2
29	300029409	RTB-3290-00000	LATERAL DERECHO	LATERAL DROITE	RIGHT SIDE PLATE		1
30	05000102	M-425-BM	MANIVELA	BIELLE	SUPORT RACKER		1
31	05001305	425-SRM	CUBO MANIVELA	AUGE BIELLE	RACKER NUT		1
32	04820105	LPA-ANIL-00011	PDOR.AN.11 (EMB.100) ZBT	GOUPILLE BAGUE (EMB.100)ZBT	RING PIN		3
33	04823005	LPC-ZN00-07004	PASADOR ALETAS 4X70	GROUPILLE FENDUE 4X70	SPLIT PIN		1
34	20470409	M-414/2-BM	PATIN	PATIN	RIGHT SKID		1
35	22102302	414/1-SRM	PATIN IZQUIERDO	PATIN GAUCHE	LEFT SKID		1
36	11032119	330/3-HM	PLATO ROTOR	PLATE ROTOR	ROTOR PLATEN		1
37	13003306	123/1-AM	PROTECTOR PLASTICO	PROTECTEUR PLASTIQUE	PLASTIC PROTECTOR		1
38	03926208	LRE-NOK0-5080F	RETEN 50X80X16,5 NOK-AQ2890E0	BAGUE D'ÉTANCHÍTÉ 50X80X16,5 NOK-AQ2890E0	OIL SEAL 50X80X16,5 NOK-AQ2890E0		1
39	03901117	LRD-NQ00-06408	RODCS 6408 40X110X27	ROULEMENT 6408 40X110X27	BEARING 6408 40X110X27		1
40	400032106	BM1-3170-05050	ROTOR 135	ROTOR 135	ROTOR 135	RZB-135 (50)	1
40	400032107	BM1-3170-05550	ROTOR 135	ROTOR 135	ROTOR 135	RZB-150 (55)	1
40	400032108	BM1-3170-06050	ROTOR 160	ROTOR 160	ROTOR 160	RZB-160 (60)	1
40	400032109	BM1-3170-06550	ROTOR 175	ROTOR 175	ROTOR 175	RZB-175 (65)	1
40	400032110	BM1-3170-07050	ROTOR 185	ROTOR 185	ROTOR 185	RZB-185 (70)	1
40	400032111	BM1-3170-07550	ROTOR 200	ROTOR 200	ROTOR 200	RZB-200 (75)	1
40	400032112	BM1-3170-08050	ROTOR 210	ROTOR 210	ROTOR 210	RZB-210 (80)	1
40	400034221	BM1-3170-08550	ROTOR 225	ROTOR 225	ROTOR 225	RZB-225 (85)	1
40	400032113	BM1-3170-09050	ROTOR 235	ROTOR 235	ROTOR 235	RZB-235 (90)	1
40	400032114	BM1-3170-10050	ROTOR 260	ROTOR 260	ROTOR 260	RZB-260 (100)	1
40	400032115	BM1-3170-11050	ROTOR 290	ROTOR 290	ROTOR 290	RZB-290 (110)	1
40	400034222	BM1-3170-11550	ROTOR 300	ROTOR 300	ROTOR 300	RZB-300 (115)	1
40	400034223	BM1-3170-12050	ROTOR 315	ROTOR 315	ROTOR 315	RZB-315 (120)	1
41	03735002	LTB-8961-03012	TORNI D961 8.8 M12-150X30 ZBT	VIS D961 8.8 M12-150X30 ZBT	SCREW D933 8.8 M12/150X30 ZBT		6
42	03702905	LTB-8933-03010	TORNI D933 8.8 M 10 X 30 ZBT	VIS D933 8.8 M 10 X 30 ZBT	SCREW D933 8.8 M10X 30 ZBT	RZB-135 ~ RZB-200	2
42	03702905	LTB-8933-03010	TORNI D933 8.8 M 10 X 30 ZBT	VIS D933 8.8 M 10 X 30 ZBT	SCREW D933 8.8 M10X 30 ZBT	RZB-210 ~ RZB-315	4
43	03703807	LTB-8933-02512	TORNI D933 8.8 M12X 25 ZBT	VIS D933 8.8 M12X 25 ZBT	SCREW D933 8.8 M12X 25 ZBT		6
44	03703904	LTB-8933-03012	TORNI D933 8.8 M12X 30 ZBT	VIS D933 8.8 M12X 30 ZBT	SCREW D933 8.8 M12X 30 ZBT		8
45	03755800	LTB-8603-03012	TORNI D603 8.8 M12X 30 ZBT	VIS D603 8.8 M12X 30 ZBT	SCREW D603 8.8 M12X 30 ZBT		1
46	03704000	LTB-8933-03512	TORNI D933 8.8 M12X 35 ZBT	VIS D933 8.8 M12X 35 ZBT	SCREW D933 8.8 M12X 35 ZBT		2
47	03733826	LTB-8931-04012	TORNI D931 8.8 M12X 40 ZBT	VIS D931 8.8 M12X 40 ZBT	SCREW D931 8.8 M12X 40 ZBT	RZB-135 ~ RZB-200	2
47	03733826	LTB-8931-04012	TORNI D931 8.8 M12X 40 ZBT	VIS D931 8.8 M12X 40 ZBT	SCREW D931 8.8 M12X 40 ZBT	RZB-210 ~ RZB-315	4
48	03704107	LTB-8933-04012	TORNI D933 8.8 M12X 40 ZBT	VIS D933 8.8 M12X 40 ZBT	SCREW D933 8.8 M12X 40 ZBT		6
49	03704204	LTB-8933-04512	TORNI D933 8.8 M12X 45 ZBT	VIS D933 8.8 M12X 45 ZBT	SCREW D933 8.8 M12X 45 ZBT		4
50	03705203	LTB-8933-03514	TORNI D933 8.8 M14X 35 ZBT	VIS D933 8.8 M14X 35 ZBT	SCREW D933 8.8 M14X 35 ZBT		2
51	03736001	LTB-8933-08014	TORNI D931 8.8 M14X 80 ZBT	VIS D931 8.8 M14X 80 ZBT	SCREW D933 8.8 M14X 80 ZBT		2
52	03706309	LTB-8933-04516	TORNI D933 8.8 M16X 45 ZBT	VIS D933 8.8 M16X 45 ZBT	SCREW D933 8.8 M16X 45 ZBT		8
53	03701605	LTB-8933-01508	TORNI D933 8.8 M 8X 15 ZBT	VIS D933 8.8 M 8X 15 ZBT	SCREW D933 8.8 M8 X 15 ZBT		2

POS.	CÓDIGO	REFERENCIA	DESCRIPCIÓN	DESIGNATION	DESCRIPTION	MÁQ.	CANT.
54	03736506	319/1-HM	TORNILLO ROTOR	VIS ROTOR	ROTOR SCREW		6
55	03770506	LTC-5934-00010	TUERC D934 5.6 M10 ZBT	ECROU D934 5.6 M10 ZBT	NUT D934 5.6 M10	RZB-135 ~ RZB-200	2
55	03770506	LTC-5934-00010	TUERC D934 5.6 M10 ZBT	ECROU D934 5.6 M10 ZBT	NUT D934 5.6 M10	RZB-210 ~ RZB-315	4
56	03770205	LTC-5934-00012	TUERC D934 5.6 M12 ZBT	ECROU D934 5.6 M12 ZBT	NUT D934 5.6 M12	RZB-135 ~ RZB-200	18
56	03770205	LTC-5934-00012	TUERC D934 5.6 M12 ZBT	ECROU D934 5.6 M12 ZBT	NUT D934 5.6 M12	RZB-210 ~ RZB-315	20
57	03780400	LTC-5980-00012	TUERC D980 5.6 M12 ZBT	ECROU D980 5.6 M12 ZBT	NUT D980 5.6 M12		1
58	03780507	LTC-5980-00014	TUERC D980 5.6 M14 ZBT	ECROU D980 5.6 M14 ZBT	NUT D934 5.6 M14		5
59	03770603	LTC-5934-00016	TUERC D934 5.6 M16 ZBT	ECROU D934 5.6 M16 ZBT	NUT D934 5.6 M16		8
60	03771408	LTC-5934-15016	TUERC D934 5.6 M16/150 ZBT	ECROU D934 5.6 M16/150 ZBT	NUT D934 5.6 M16/150		4
61	13300805	M-316-AM	TUERCA ROTOR	ECROU ROTOR	ROTOR NUT		1

RETENES NOK

RZB-XXX B????? 540 RPM

RZB-XXX O????? 1000 RPM

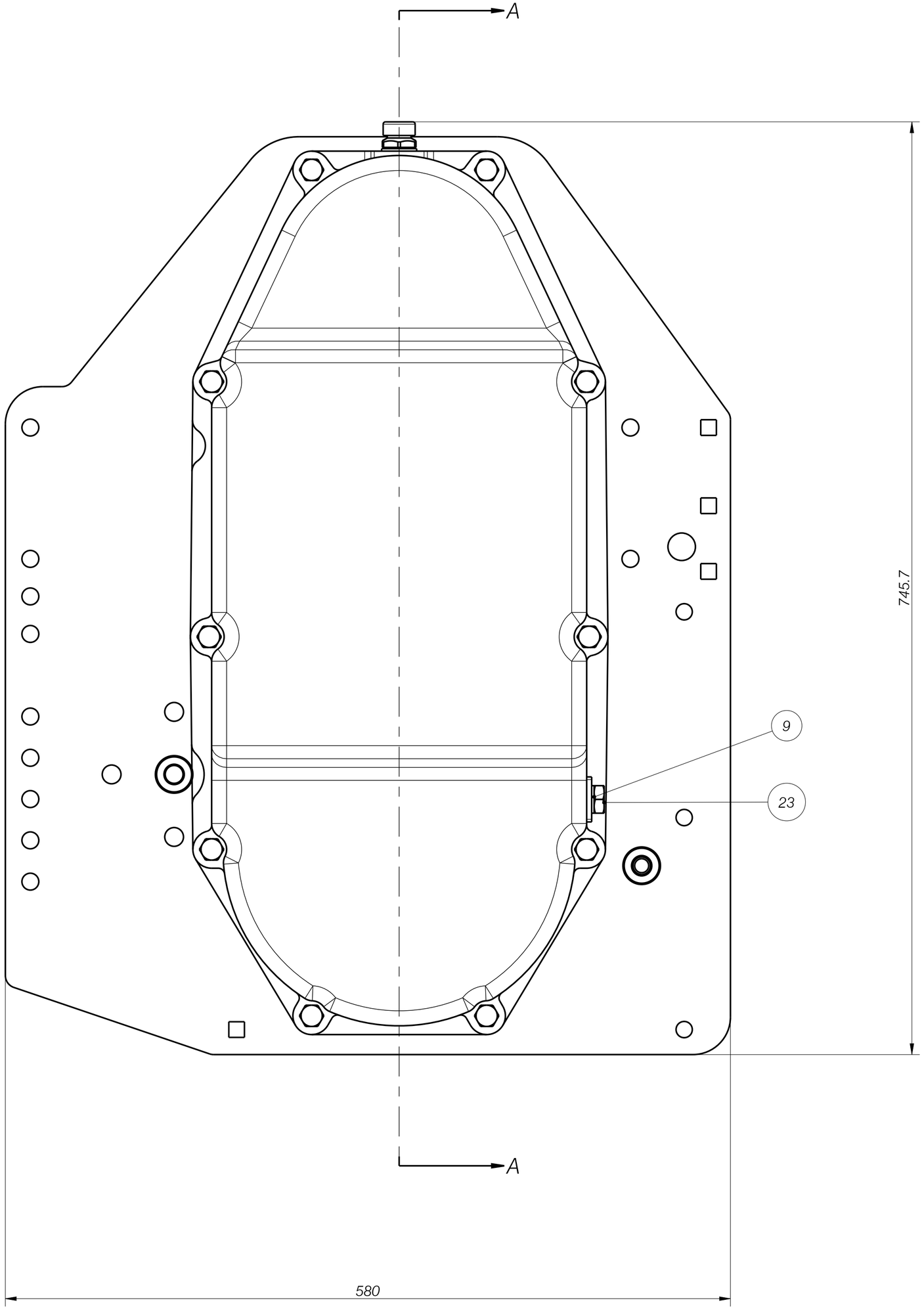

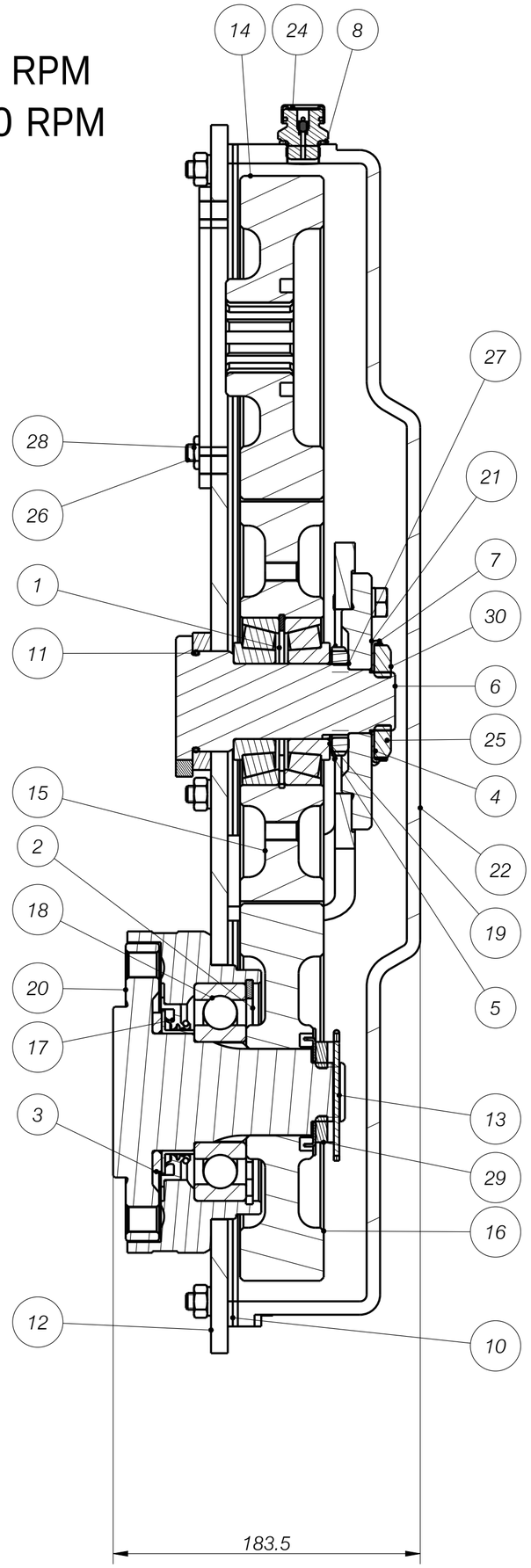

SECCIÓN A-A

RETENES NOK

RZB-XXX B????? 540 RPM

RZB-XXX O????? 1000 RPM

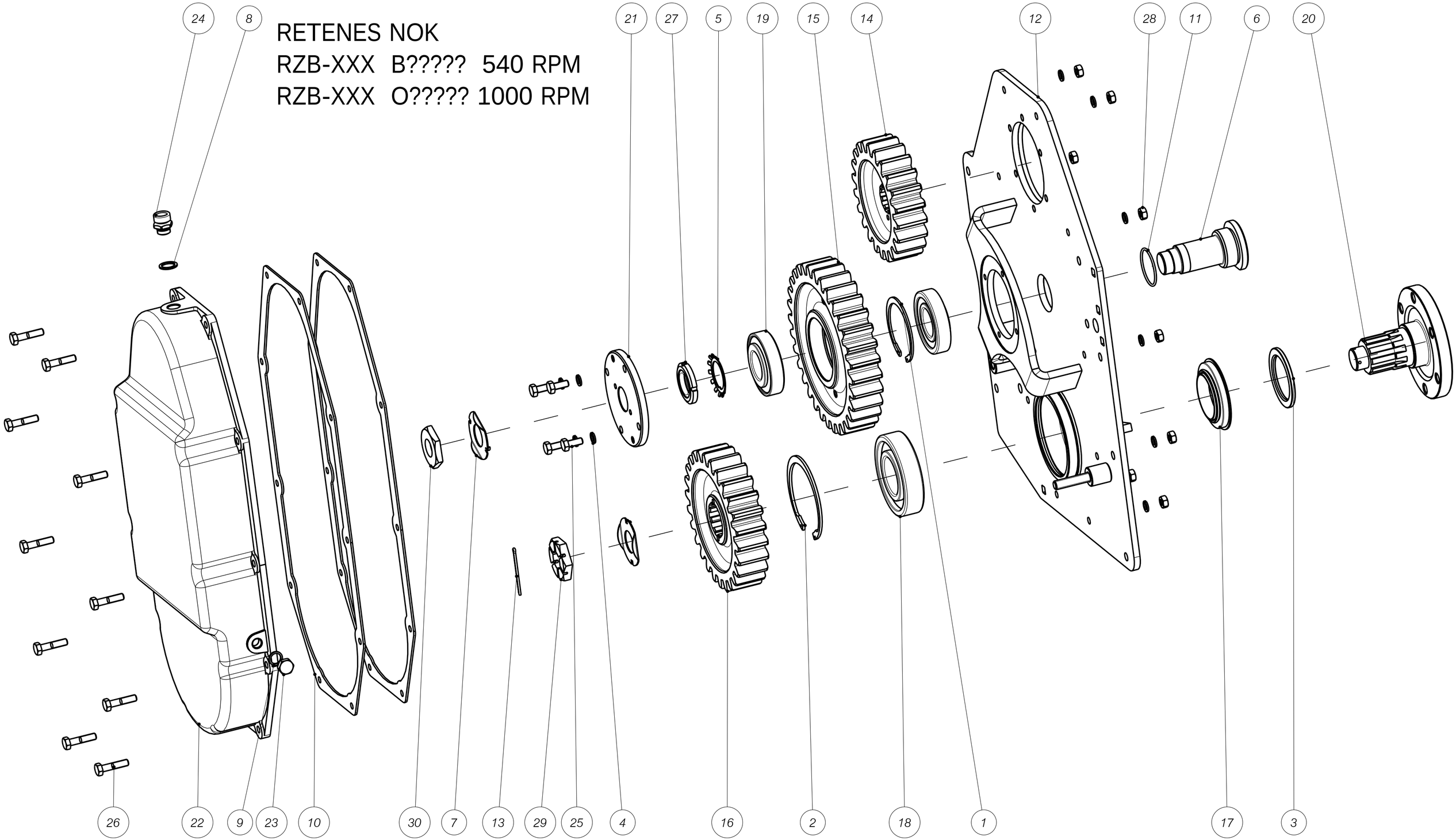

POS.	CÓDIGO	REFERENCIA	DESCRIPCIÓN	DESIGNATION	DESCRIPTION	MÁQ.	CANT.
1	04140506	LAE-E000-00100	ANILLO ELASTICO I-100	BAGUE ÉLASTIQUE I-100	RING PIN E-100		1
2	04140807	LAE-E000-00100	ANILLO ELASTICO I-130	BAGUE ÉLASTIQUE I-130	RING PIN E-130		1
3	11400501	312-BM	ANILLO SEPARADOR RETEN	BAGUE SEPARATEUR RETEN			1
4	03820401	LAR-0127-00010	ARAND.GROWER DIN-127 10 ZBT	RONDELLE GROWER DIN-127 10	GROWER WASHER DIN-127 10		14
5	03830800	LAR-DMB9-00045	ARANDELA DE CIERRE D.45 MB-9	RONDELLE FERMETURE D.45 MB-9	CLOSING WASHER D.45 MB-9		1
6	11109307	306-BMR	BULON PIÑON INTERMEDIO	BOULON PIGNON INTERMÈDE	IDLER PIN		1
8	03951918	227/1-AM	JUNTA 1/2 GAS.	JOINT 1/2 GAS	GASKET 1/2 GAS		1
9	03951808	226-AM	JUNTA	JOINT	GASKET		1
10	03959402	415-SRF	JUNTA	JOINT	GASKET		2
11	03941302	LJT-0000-55613	JUNTA TORICA 55 X 61 X 3	JOINT 55X61X3	GASKET 55X61X3		1
12	300033317	RZB-3010-00000	LATERAL IZQUIERDO	LATERAL GAUCHE	LEFT SIDE PLATE		1
13	04823005	LPC-ZN00-07004	PASADOR ALETAS 4X70	GROUPILLE FENDUE 4X70	SPLIT PIN 4X70		1
14	11316703	302-BMR	PIÑON EJE CORONA	PIGNON AXE COURONNE	CROWN SHAFT PINION		1
15	11316800	303-BMR	PIÑON INTERMEDIO	PIGNON INTERMÈDE	IDLER		1
15	10341104	254-BM	CHAPA DE SEGURIDAD	TÔLE DE SÛRETÉ	SAFETY PLATE		2
16	11316907	315-BMR	PIÑON ROTOR ESTRIADO	PIGNON ROTOR RAYAGE	SPLINED ROTOR PINION		1
17	03926305	LRE-NOK0-5080F	RETEN 70X105X19,5 NOK-AQ7534P	BAGUE D'ÉTANCHÍTÉ 70X105X19,5 N0	OIL SEAL 50X80X16,5 NOK-AQ2890E0		1
18	03901816	LRD-NQ00-06312	RODCS 6312 60X130X31	ROULEMENT 6312 60X130X31	BEARING 6312 60X130X31		1
19	03904017	LRD-NQ00-30309	RODCS 30309 45X100X27,25	ROULEMENT 30309 45X100X27,25	BEARING 30309 45X100X27,25		2
20	11023502	309-BMR	ROTOR ESTRIADO	ROTOR RAYAGE	SPLINED ROTOR		1
21	10234909	305-BMR	TAPA APOYO BULON	COUVERCLE APPUI BOULON	SUPPORT PIN COVER		1
22	10204113	416/2-SRF	TAPA ENGRANAJES	COUVERCLE ENGRENAGES	GEAR COVER		1
23	04100104	417-AM	TAPON ACEITE 3/8 GAS	BOUCHON HUILE 3/8 GAS	OIL PLUG 3/8 GAS		1
24	12800708	418/2-BM	TAPON DESVAPORIZADOR	BOUCHON DESVAPORIZATEUR	VAPOR RELEASE PLUG		1
25	03702808	LTB-8933-02510	TORNI D933 8.8 M 10X 25 ZBT	VIS D933 8.8 M 10X 25 ZBT	SCREW D933 8.8 M10X 25 ZBT		4
26	03732908	LTB-8931-04510	TORNI D931 8.8 M10X 45 ZBT	VIS D931 8.8 M10X 45 ZBT	SCREW D931 8.8 M10X 45 ZBT		10
27	03797501	LTC-FGK9-01545	TUERCA FAG M45X1,5 KM-9	ECROU FAG M45X1,5 KM-9	NUT FAG M45X1,5 KM-9		1
28	03770506	LTC-5934-00010	TUERC D934 5.6 M10 ZBT	ECROU D934 5.6 M10 ZBT	NUT D934 5.6 M10		10
29	13300805	M-316-AM	TUERCA ROTOR	ECROU ROTOR	ROTOR NUT		1
30	13300902	M-316-BM	TUERCA ROTOR ESTRIADO	ECROU ROTOR RAYAGE	SPLINED ROTOR NUT		1

AX-50

RZB-XXX C????? 540 RPM

RZB-XXX P????? 1000 RPM

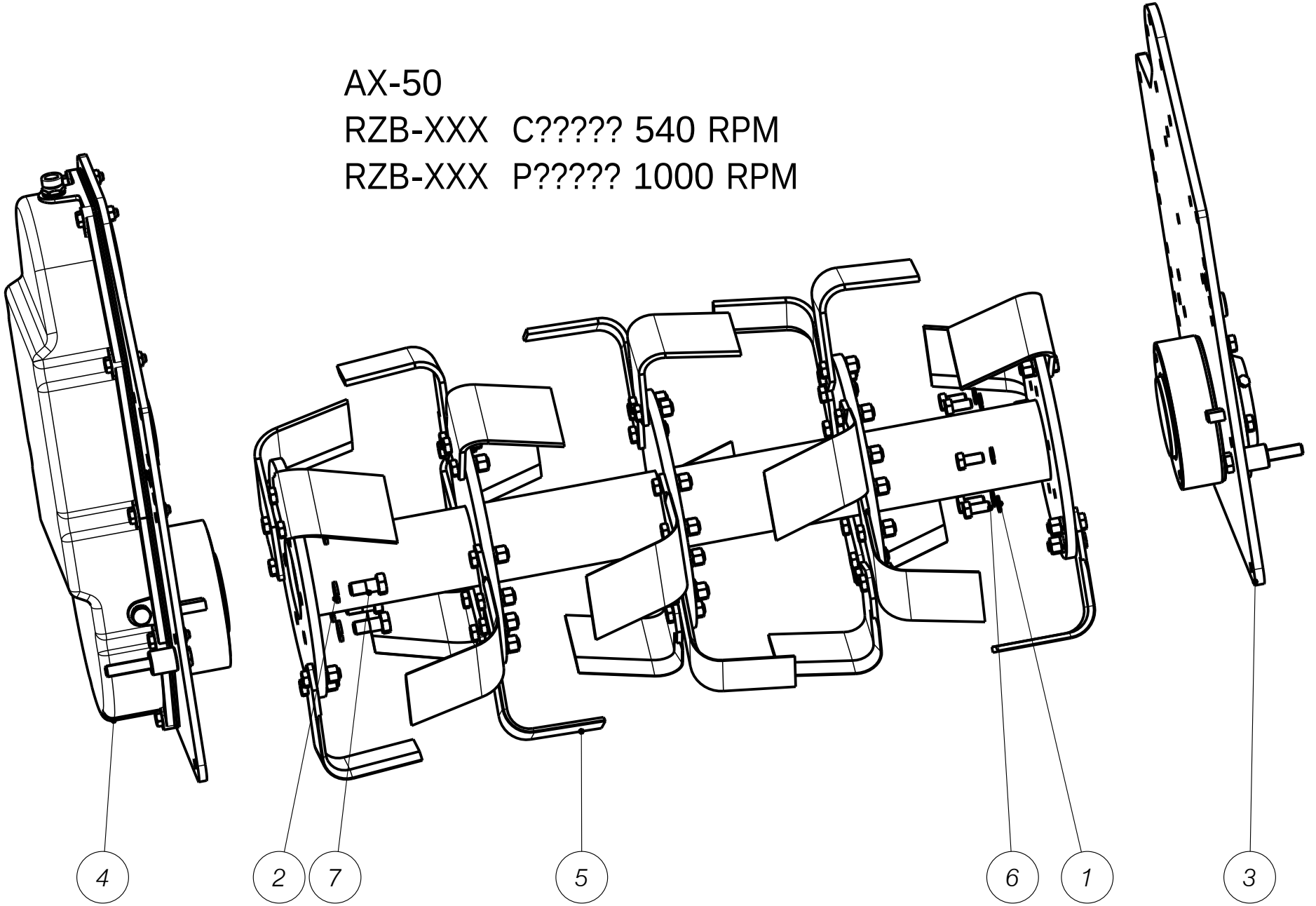

AX-50

RZB-XXX C????? 540 RPM

RZB-XXX P????? 1000 RPM

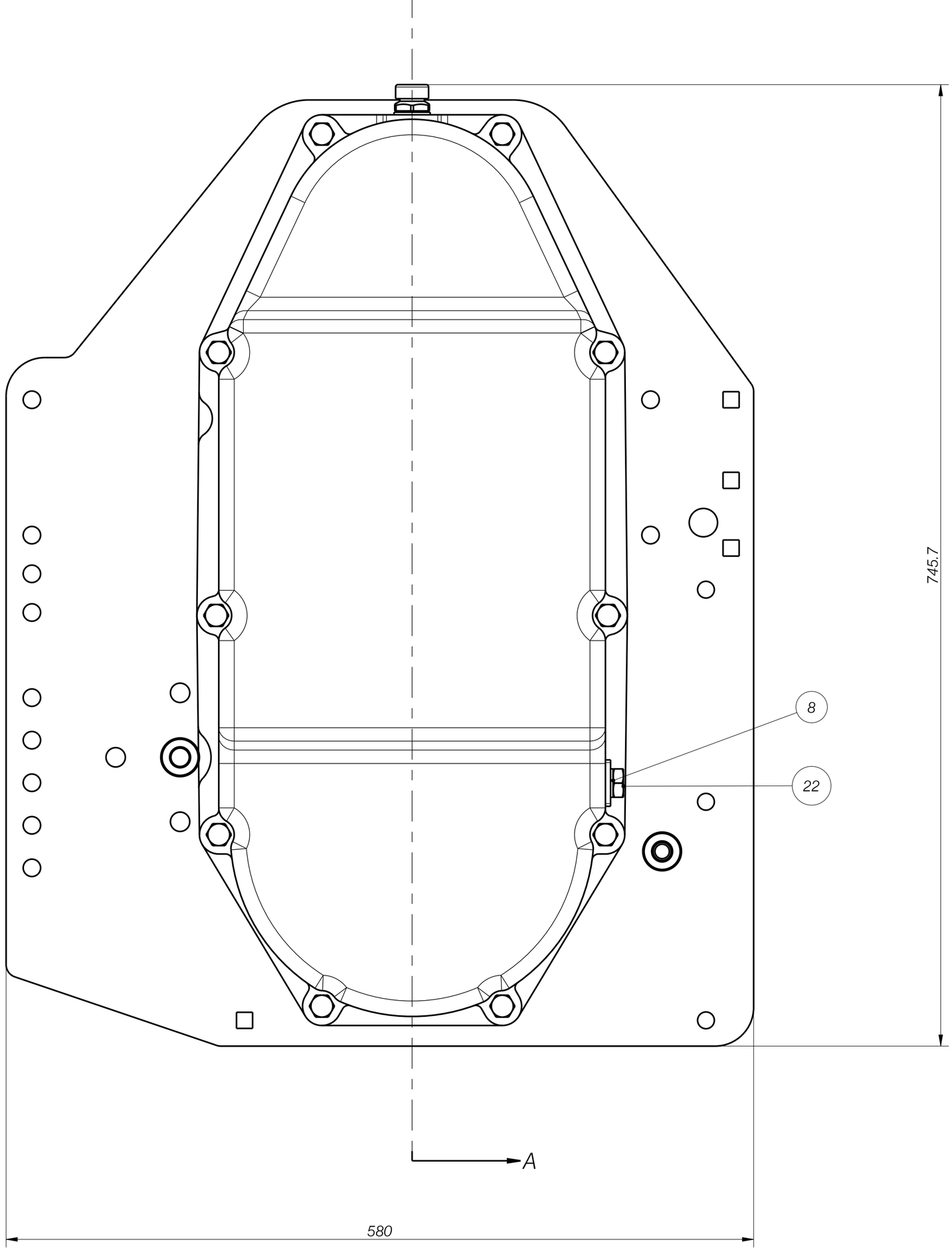

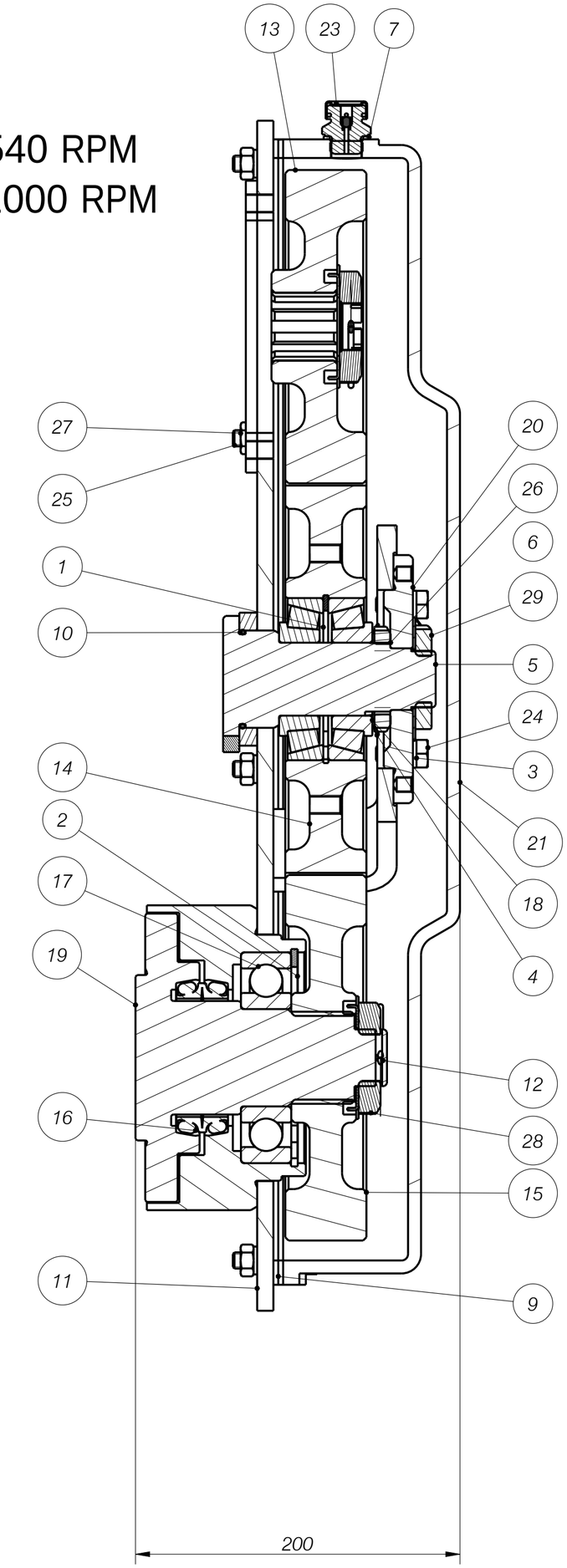

AX-50

RZB-XXX C????? 540 RPM

RZB-XXX P????? 1000 RPM

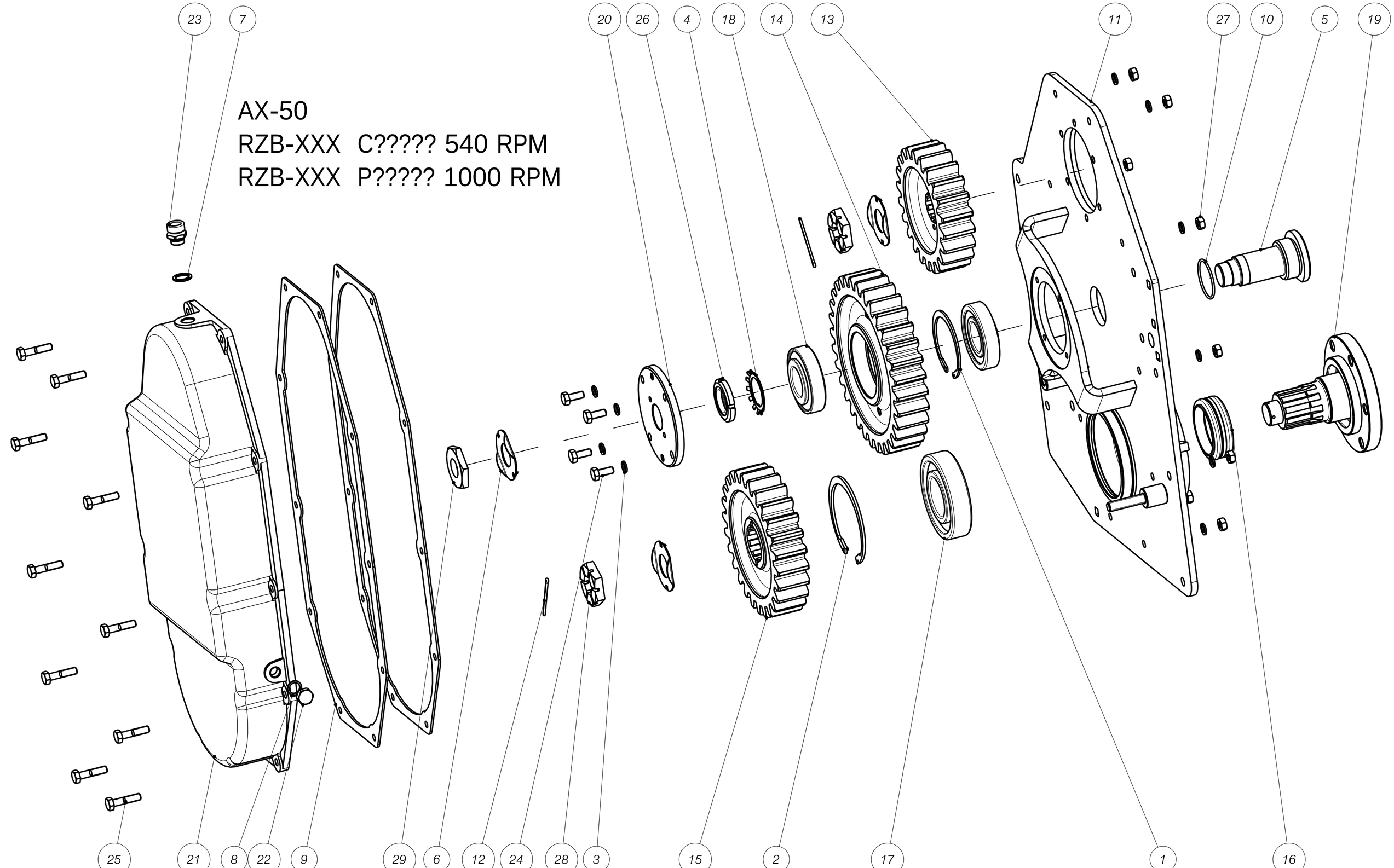

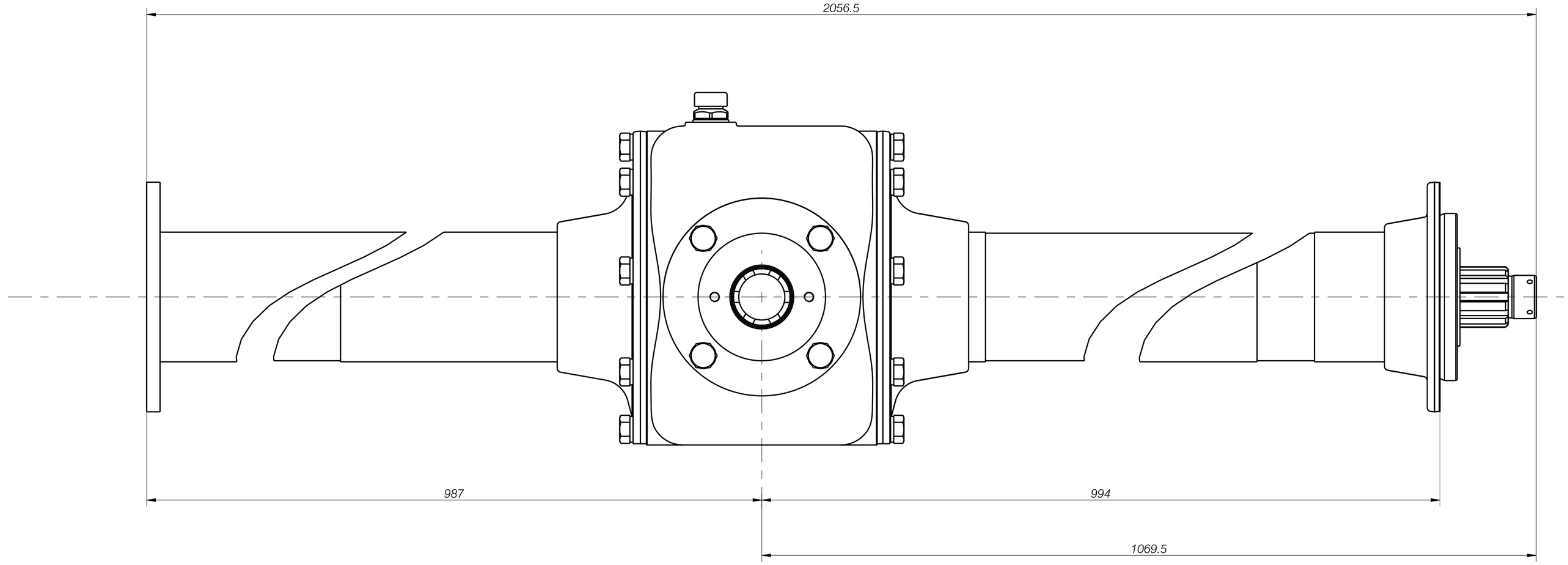

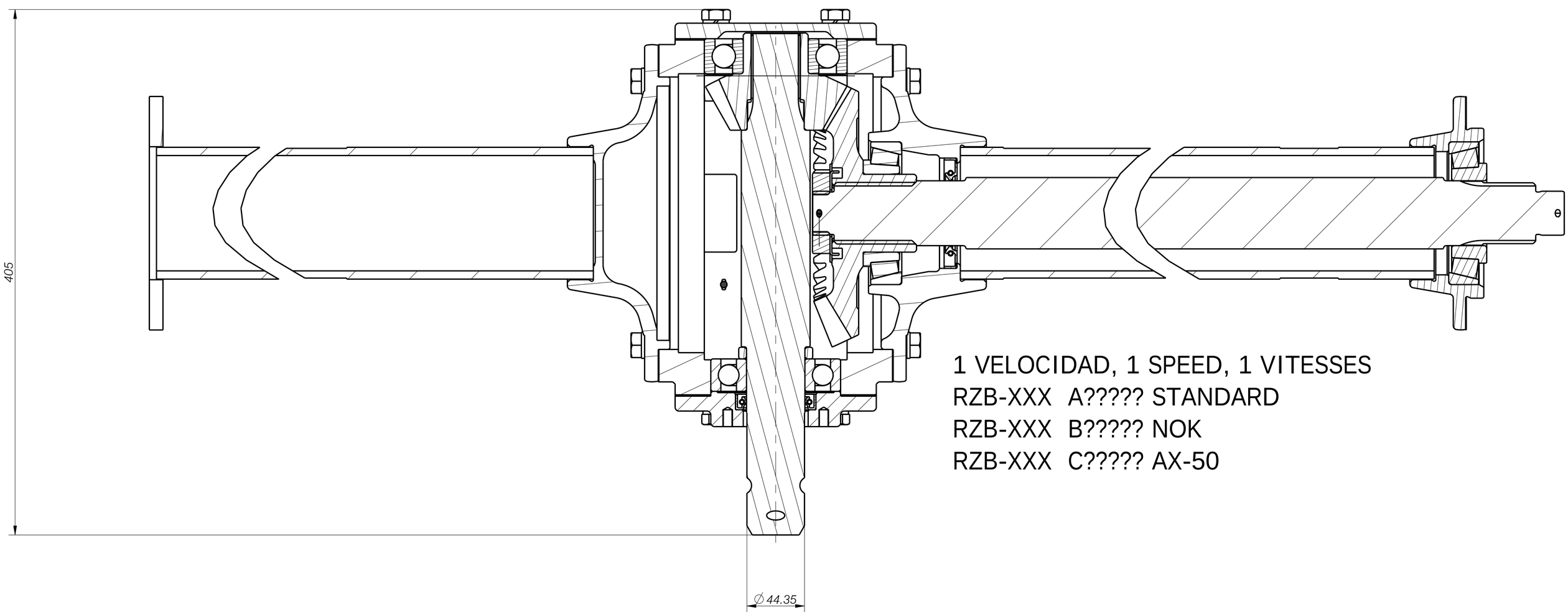

1 VELOCIDAD, 1 SPEED, 1 VITESSES

RZB-XXX A????? STANDARD

RZB-XXX B????? NOK

RZB-XXX C????? AX-50

1 VELOCIDAD, 1 SPEED, 1 VITESSES
RZB-XXX A????? STANDARD
RZB-XXX B????? NOK
RZB-XXX C????? AX-50

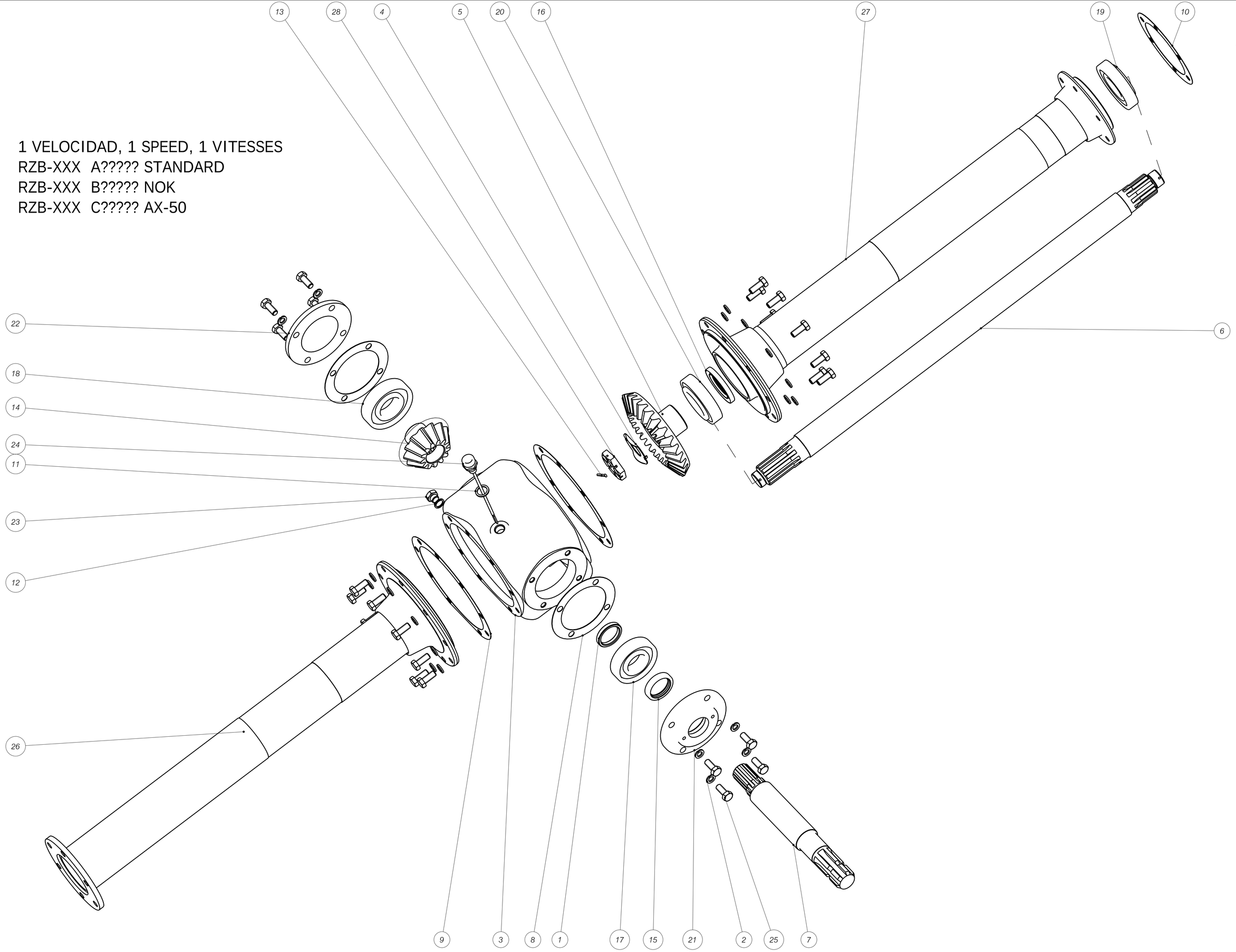

POS.	CÓDIGO	REFERENCIA	DESCRIPCIÓN	DESIGNATION	DESCRIPTION	MÁQ.	CANT.
1	11405700	M-207-BM	ANILLO	BAGUE	RING		1
2	03820508	LAR-0127-00012	ARAND.GROWER DIN-127 12 ZBT	RONDELLE GROWER DIN-127 12 ZBT	WASHER GROWER DIN-127 12 ZBT		26
3	13100801	M-201-BS	CAJA	BOÎTE	HOUSING		1
4	10341104	254-BM	CHAPA DE SEGURIDAD	TÔLE DE SÛRETÉ	SAFETY PLATE		1
5	11301105	M-250-BM	CORONA CONICA	COURONNE	CONIC CROWN		1
6	200033683	RTB-2530-05000	EJE CORONA 135	AXE COURONNE 135	CROWN SHAFT 135	RZB-135 (50)	1
6	200033684	RTB-2530-05500	EJE CORONA 150	AXE COURONNE 150	CROWN SHAFT 150	RZB-150 (55)	1
6	200033685	RTB-2530-06000	EJE CORONA 160	AXE COURONNE 160	CROWN SHAFT 160	RZB-160 (60)	1
6	200033686	RTB-2530-06500	EJE CORONA 175	AXE COURONNE 175	CROWN SHAFT 175	RZB-175 (65)	1
6	200033687	RTB-2530-07000	EJE CORONA 185	AXE COURONNE 185	CROWN SHAFT 185	RZB-185 (70)	1
6	200033688	RTB-2530-07500	EJE CORONA 200	AXE COURONNE 200	CROWN SHAFT 200	RZB-200 (75)	1
6	200033689	RTB-2530-08000	EJE CORONA 210	AXE COURONNE 210	CROWN SHAFT 210	RZB-210 (80)	1
6	200033690	RTB-2530-08500	EJE CORONA 225	AXE COURONNE 225	CROWN SHAFT 225	RZB-225 (85)	1
6	200033691	RTB-2530-09000	EJE CORONA 235	AXE COURONNE 235	CROWN SHAFT 235	RZB-235 (90)	1
6	200033692	RTB-2530-10000	EJE CORONA 260	AXE COURONNE 260	CROWN SHAFT 260	RZB-260 (100)	1
6	200033693	RTB-2530-11000	EJE CORONA 290	AXE COURONNE 290	CROWN SHAFT 290	RZB-290 (110)	1
6	200033694	RTB-2530-11500	EJE CORONA 300	AXE COURONNE 300	CROWN SHAFT 300	RZB-300 (115)	1
6	200033695	RTB-2530-12000	EJE CORONA 315	AXE COURONNE 315	CROWN SHAFT 315	RZB-315 (120)	1
7	11025403	206-BMSR	EJE ENTRADA	AXE ENTRÉE	INPUT SHAFT		1
8	03951303	M-220-BMS	JUNTA	JOINT	GASKET		2
9	03952205	M-261-BM	JUNTA	JOINT	GASKET		2
10	03953000	M-286-BM	JUNTA	JOINT	GASKET		1
11	03951918	227/1-AM	JUNTA 1/2 GAS.	JOINT 1/2" GAS	GASKET 1/2 GAS		1
12	03951808	226-AM	JUNTA	JOINT	GASKET		1
13	04823005	LPC-ZN00-07004	PASADOR ALETAS 4X70	GROUPILLE FENDUE 4X70	SPLIT PIN 4X70		1
14	11300407	M-211-BM	PIÑON CONICO	PIGNON	CONIC PINION		1
15	03922202	LRE-LDN1-45622	RETEN 45 X 62 X12 LD N	BAGUE D'ÉTANCHÍTÉ 45X62X12 LD N	OIL SEAL 45X62X12 LD N		1
16	03924802	LRE-LSN1-45850	RETEN 50 X 85 X10 LS N	BAGUE D'ÉTANCHÍTÉ 50X85X10 LS N	OIL SEAL 50X85X10 LS N		1
17	03901311	LRD-NQ00-06309	RODCS 6309 45X100X25	ROULEMENT 6309 45X100X25	BERING 6309 45X100X25		1
18	03901515	LRD-NQ00-06310	RODCS 6310 50X110X27	ROULEMENT 6310 50X110X27	BEARING 6310 50X110X27		1
19	03904211	LRD-NQ00-30310	RODCS 30310 50X110X29,25	ROULEMENT 30310 50X110X2,25	BEARING 30310 50X110X2,25		1
20	03904318	LRD-NQ00-32212	RODCS 32212 60X110X29,75	ROULEMENT 32212 60X110X29,75	BEARING 32212 60X110X29,75		1
21	10230408	M-221-BMS	TAPA DELANTERA	COUVERCLE AVANT	FRONT COVER		1
22	10230903	M-213-BMS	TAPA TRASERA	COUVERCLE ARRIÈRE	REAR COVER		1
23	04100104	417-AM	TAPON ACEITE 3/8 GAS	BOUCHON 3/8" GAS	PLUG 3/8" GAS		1
24	22800303	202/3-BMS	TAPON NIVEL ACEITE	BOUCHON NIVEAU HUILE 1/2" GAS	OIL LEVEL PLUG		1
25	03703904	LTB-8933-03012	TORNI D933 8.8 M12X 30 ZBT	VIS D.933 8.8 M12X 30 ZBT	SCREW D933 8.8 M12X 30 ZBT		26
26	300034314	RTB-2700-05000	TROMPETA DERECHA 135	TROMPETTE DROITE 135	RIGHT FLARED TUBE 135	RZB-135 (50)	1
26	300033824	RTB-2700-05500	TROMPETA DERECHA 150	TROMPETTE DROITE 150	RIGHT FLARED TUBE 150	RZB-150 (55)	1

POS.	CÓDIGO	REFERENCIA	DESCRIPCIÓN	DESIGNATION	DESCRIPTION	MÁQ.	CANT.
26	300033825	RTB-2700-06000	TROMPETA DERECHA 160	TROMPETTE DROITE 160	RIGHT FLARED TUBE 160	RZB-160 (60)	1
26	300033826	RTB-2700-06500	TROMPETA DERECHA 175	TROMPETTE DROITE 175	RIGHT FLARED TUBE 175	RZB-175 (65)	1

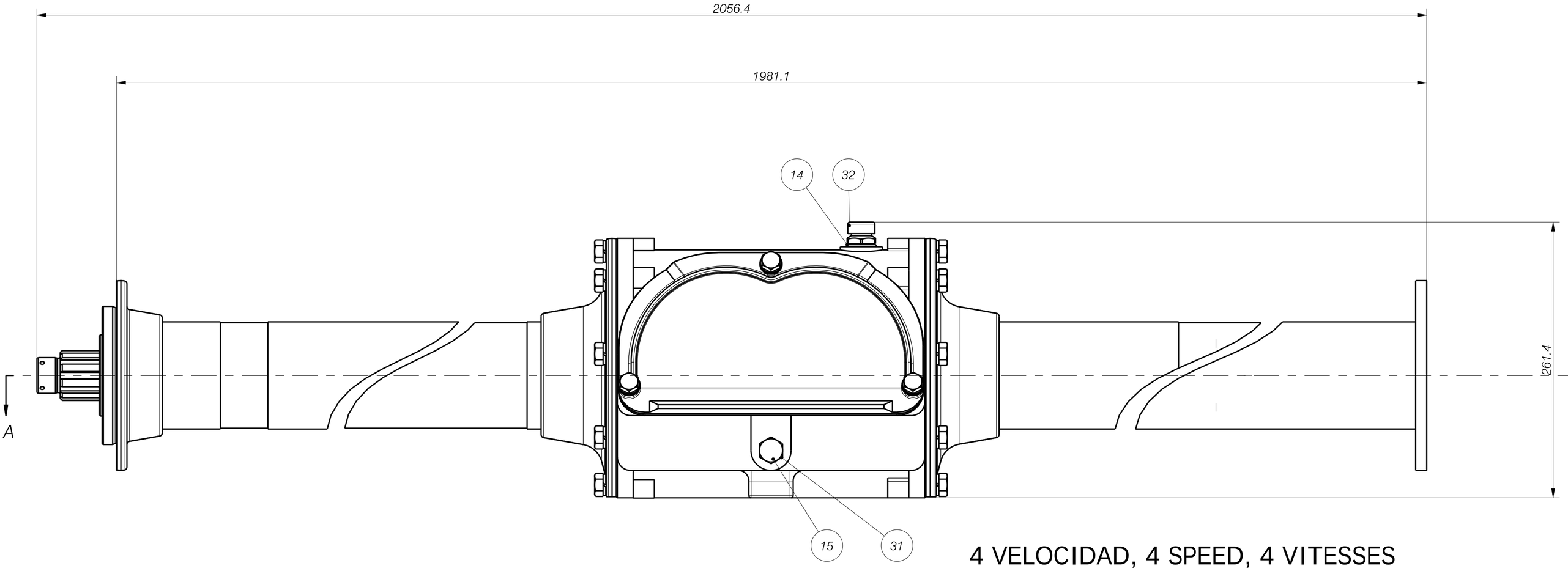

4 VELOCIDAD, 4 SPEED, 4 VITESSES
RZB-XXX E????? 540 RPM STANDARD
RZB-XXX F????? 540 RPM NOK
RZB-XXX H????? 540 RPM AX-50
RZB-XXX E????? 1000 RPM STANDARD
RZB-XXX F????? 1000 RPM NOK
RZB-XXX H????? 1000 RPM AX-50

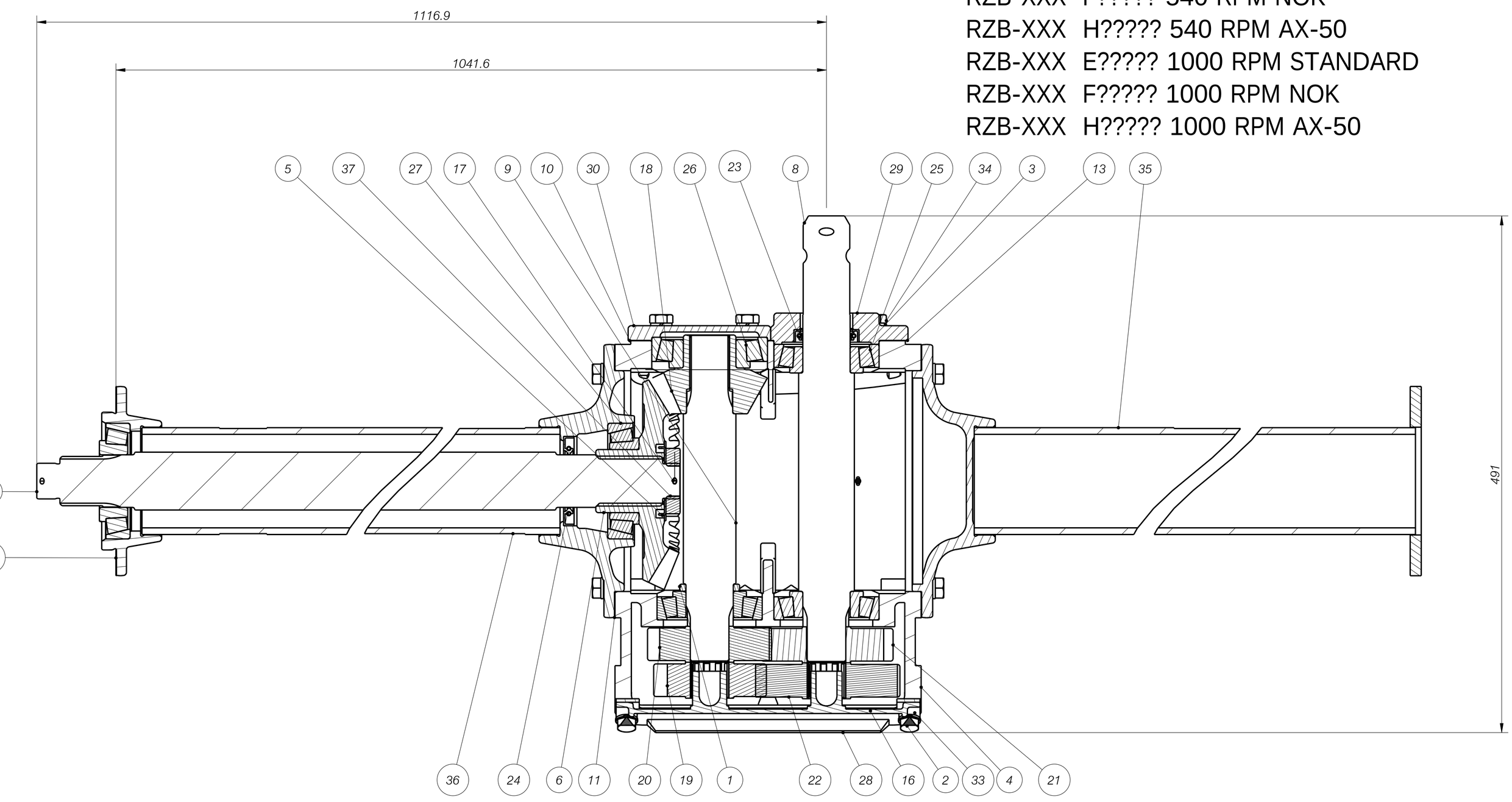

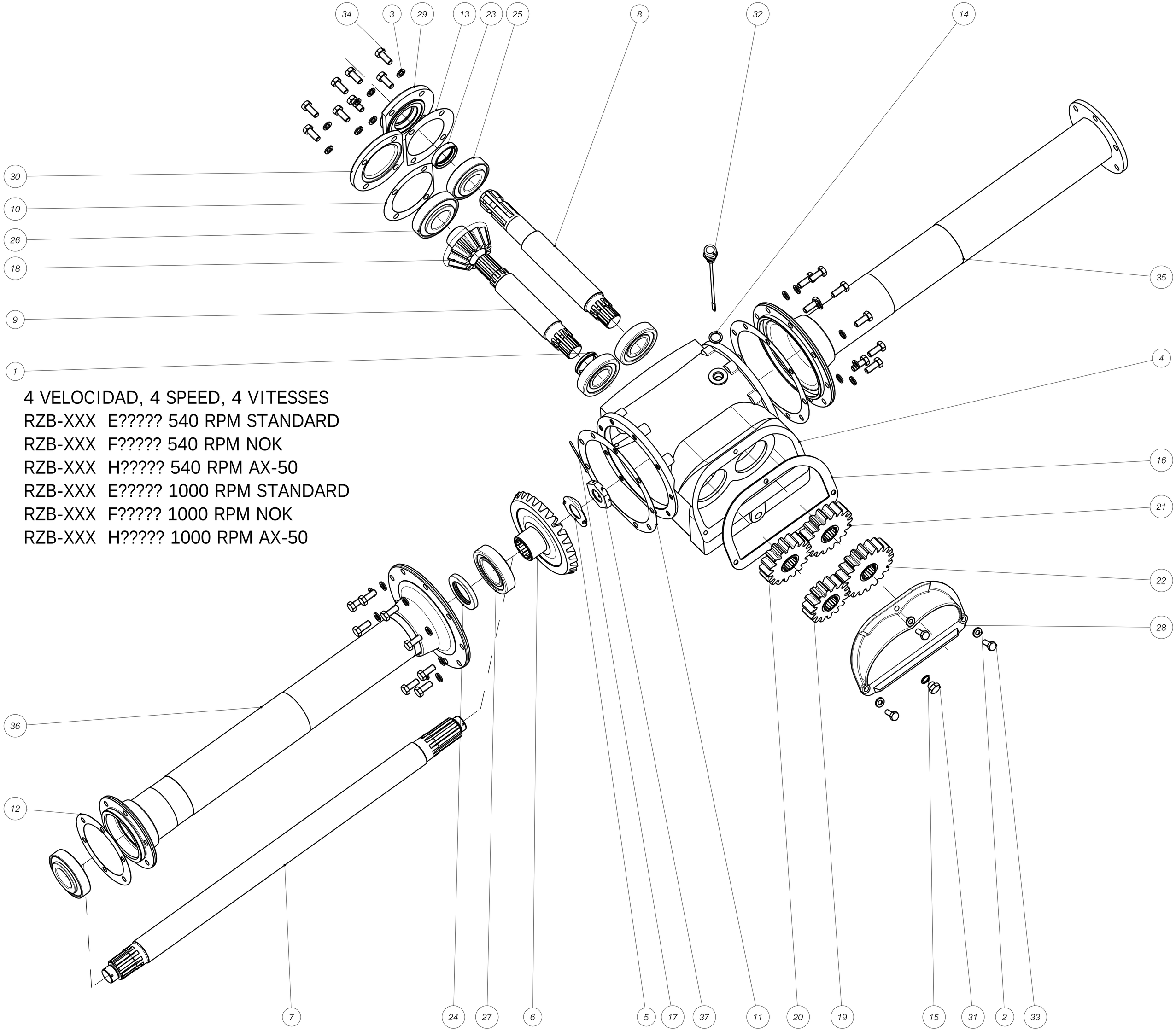

4 VELOCIDAD, 4 SPEED, 4 VITESSES
RZB-XXX E????? 540 RPM STANDARD
RZB-XXX F????? 540 RPM NOK
RZB-XXX H????? 540 RPM AX-50
RZB-XXX E????? 1000 RPM STANDARD
RZB-XXX F????? 1000 RPM NOK
RZB-XXX H????? 1000 RPM AX-50

POS.	CÓDIGO	REFERENCIA	DESCRIPCIÓN	DESIGNATION	DESCRIPTION	MÁQ.	CANT.
1	04125606	M-207/1-BM	ANILLO	BAGUE	RING		1
2	03800603	LAR-0125-00010	ARAND.PLANA DIN-125 10 ZBT	RONDELLE PLANE DIN-125 10 ZBT	WASHER PLANE DIN-125 10 ZBT		3
3	03820508	LAG-0127-00012	ARAND.GROWER DIN-127 12 ZBT	RONDELLE GROWER DIN-127 12 ZBT	WASHER GROWER DIN-127 12 ZBT		26
4	13103206	M-201/1-B	CAJA	BOÎTE	HOUSING		1
5	10341104	254-BM	CHAPA DE SEGURIDAD	TÔLE DE SÛRETÉ	SAFETY PLATE		1
6	11301105	M-250-BM	CORONA CONICA	COURONNE	CONIC CROWN		1
7	200033682	RTB-2530-04500	EJE CORONA 125	AXE COURONNE 135	CROWN SHAFT 135	RZB-135 (50)	1
7	200033683	RTB-2530-05000	EJE CORONA 135	AXE COURONNE 150	CROWN SHAFT 150	RZB-150 (55)	1
7	200033684	RTB-2530-05500	EJE CORONA 150	AXE COURONNE 160	CROWN SHAFT 160	RZB-160 (60)	1
7	200033685	RTB-2530-06000	EJE CORONA 160	AXE COURONNE 175	CROWN SHAFT 175	RZB-175 (65)	1
7	200033686	RTB-2530-06500	EJE CORONA 175	AXE COURONNE 185	CROWN SHAFT 185	RZB-185 (70)	1
7	200033687	RTB-2530-07000	EJE CORONA 185	AXE COURONNE 200	CROWN SHAFT 200	RZB-200 (75)	1
7	200033688	RTB-2530-07500	EJE CORONA 200	AXE COURONNE 210	CROWN SHAFT 210	RZB-210 (80)	1
7	200033689	RTB-2530-08000	EJE CORONA 210	AXE COURONNE 225	CROWN SHAFT 225	RZB-225 (85)	1
7	200033690	RTB-2530-08500	EJE CORONA 225	AXE COURONNE 235	CROWN SHAFT 235	RZB-235 (90)	1
7	200034682	RTB-2530-09500	EJE CORONA 235	AXE COURONNE 260	CROWN SHAFT 260	RZB-260 (100)	1
7	200034683	RTB-2530-10500	EJE CORONA 260	AXE COURONNE 290	CROWN SHAFT 290	RZB-290 (110)	1
7	200033693	RTB-2530-11000	EJE CORONA 290	AXE COURONNE 300	CROWN SHAFT 300	RZB-300 (115)	1
7	200033694	RTB-2530-11500	EJE CORONA 300	AXE COURONNE 315	CROWN SHAFT 315	RZB-315 (120)	1
8	11025209	206-BMR	EJE ENTRADA	AXE ENTRÉE	INPUT SHAFT		1
9	11000406	M-210-BM	EJE TRANSMISION	AXE TRANSMISSION	TRANSMISION SHAFT		1
10	03956609	M-219-BM	JUNTA	JOINT	GASKET		1
11	03952205	M-261-BM	JUNTA	JOINT	GASKET		2
12	03953000	M-286-BM	JUNTA	JOINT	GASKET		1
13	03956502	M-220/1-BM	JUNTA	JOINT	GASKET		1
14	03951918	227/1-AM	JUNTA 1/2 GAS.	JOINT 1/2" GAS	GASKET 1/2 GAS		1
15	03951808	226-AM	JUNTA	JOINT	GASKET		1
16	03950100	214-AM	JUNTA	JOINT	GASKET		1
17	04823005	LPC-ZN00-07004	PASADOR ALETAS 4X70	GROUPILLE FENDUE 4X70	SPLIT PIN 4X70		1
18	11300407	M-211-BM	PIÑON CONICO	PIGNON	CONIC PINION		1
19	11313900	209-BM-15-Z	PIÑON CAMBIO	PIGNON CHANGEMENT	CHANGE PINION		1
20	11314006	209-BM-17-Z	PIÑON CAMBIO	PIGNON CHANGEMENT	CHANGE PINION		1
21	11314103	209-BM-18-Z	PIÑON CAMBIO	PIGNON CHANGEMENT	CHANGE PINION		1
22	11314200	209-BM-20-Z	PIÑON CAMBIO	PIGNON CHANGEMENT	CHANGE PINION		1
23	03922202	LRE-LDN1-45622	RETEN 45 X 62 X12 LD N	BAGUE D'ÉTANCHÍTÉ 40X62X12 LD N	OIL SEAL 45X62X12 LD N		1
24	03924802	LRE-LSN1-50850	RETEN 50 X 85 X10 LS N	BAGUE D'ÉTANCHÍTÉ 50X85X10 LS N	OIL SEAL 50X85X10 LS N		1
25	03904017	LRD-NQ00-30309	RODCS 30309 45X100X27,25	ROULEMENT 30309 45X110X27.25	BERING 6309 45X100X25		3
26	03904211	LRD-NQ00-30310	RODCS 30310 50X110X29,25	ROULEMENT 30310 50X110X29,25	BEARING 6310 50X110X27		2
27	03904318	LRD-NQ00-32212	RODCS 32212 60X110X29,75	ROULEMENT 32212 60X110X29,75	BEARING 30310 50X110X2,25		1

POS.	CÓDIGO	REFERENCIA	DESCRIPCIÓN	DESIGNATION	DESCRIPTION	MÁQ.	CANT.
28	10200609	M-213/2-BM	TAPA PIÑONES	COUVERCLE PIGNON	BEARING 32212 60X110X29,75		1
29	10202607	224-BM	TAPA EJE ENTRADA	COUVERCLE AXE ENTRÉE	FRONT COVER		1
30	10203305	225-BM	TAPA EJE TRANS.	COUVERCLE AXE TRANSMISSION	REAR COVER		1
31	04100104	417-AM	TAPON ACEITE 3/8 GAS	BOUCHON 3/8" GAS	PLUG 3/8" GAS		1
32	22800303	202/3-BMS	TAPON NIVEL ACEITE	BOUCHON NIVEAU HUILE 1/2" GAS	OIL LEVEL PLUG		1
33	03702808	LTB-8933-02510	TORNI D933 8.8 M 10X 25 ZBT	VIS D.933 8.8 M10X 25 ZBT	SCREW D933 8.8 M10X 25 ZBT		3
34	03703904	LTB-8933-03012	TORNI D933 8.8 M12X 30 ZBT	VIS D.933 8.8 M12X 30 ZBT	SCREW D933 8.8 M12X 30 ZBT		26
35	300034368	RTB-2701-05000	TROMPETA DERECHA 135	TROMPETTE DROITE 135	RIGHT FLARED TUBE 135	RZB-135 (50)	1
35	300034369	RTB-2701-05500	TROMPETA DERECHA 150	TROMPETTE DROITE 150	RIGHT FLARED TUBE 150	RZB-150 (55)	1
35	300034370	RTB-2701-06000	TROMPETA DERECHA 160	TROMPETTE DROITE 160	RIGHT FLARED TUBE 160	RZB-160 (60)	1
35	300034371	RTB-2701-06500	TROMPETA DERECHA 175	TROMPETTE DROITE 175	RIGHT FLARED TUBE 175	RZB-175 (65)	1
35	300034372	RTB-2701-07000	TROMPETA DERECHA 185	TROMPETTE DROITE 185	RIGHT FLARED TUBE 185	RZB-185 (70)	1
35	300034373	RTB-2701-07500	TROMPETA DERECHA 200	TROMPETTE DROITE 200	RIGHT FLARED TUBE 200	RZB-200 (75)	1
35	300034374	RTB-2701-08000	TROMPETA DERECHA 210	TROMPETTE DROITE 210	RIGHT FLARED TUBE 210	RZB-210 (80)	1
35	300034375	RTB-2701-08500	TROMPETA DERECHA 225	TROMPETTE DROITE 225	RIGHT FLARED TUBE 225	RZB-225 (85)	1
35	300034376	RTB-2701-09000	TROMPETA DERECHA 235	TROMPETTE DROITE 235	RIGHT FLARED TUBE 235	RZB-235 (90)	1
35	300034377	RTB-2701-10000	TROMPETA DERECHA 260	TROMPETTE DROITE 260	RIGHT FLARED TUBE 260	RZB-260 (100)	1
35	300034378	RTB-2701-11000	TROMPETA DERECHA 290	TROMPETTE DROITE 290	RIGHT FLARED TUBE 290	RZB-290 (110)	1
35	300034379	RTB-2701-11500	TROMPETA DERECHA 300	TROMPETTE DROITE 300	RIGHT FLARED TUBE 300	RZB-300 (115)	1
35	300034380	RTB-2701-12000	TROMPETA DERECHA 315	TROMPETTE DROITE 315	RIGHT FLARED TUBE 315	RZB-315 (120)	1
36	300033798	RTB-2570-04500	TROMPETA IZQUIERDA 125	TROMPETTE GAUCHE 125	LEFT FLARED TUB 125	RZB-135 (50)	1
36	300033799	RTB-2570-05000	TROMPETA IZQUIERDA 135	TROMPETTE GAUCHE 135	LEFT FLARED TUB 135	RZB-150 (55)	1
36	300033800	RTB-2570-05500	TROMPETA IZQUIERDA 150	TROMPETTE GAUCHE 150	LEFT FLARED TUB 150	RZB-160 (60)	1
36	300033801	RTB-2570-06000	TROMPETA IZQUIERDA 160	TROMPETTE GAUCHE 160	LEFT FLARED TUB 160	RZB-175 (65)	1
36	300033802	RTB-2570-06500	TROMPETA IZQUIERDA 175	TROMPETTE GAUCHE 175	LEFT FLARED TUB 175	RZB-185 (70)	1
36	300033803	RTB-2570-07000	TROMPETA IZQUIERDA 185	TROMPETTE GAUCHE 185	LEFT FLARED TUB 185	RZB-200 (75)	1
36	300033804	RTB-2570-07500	TROMPETA IZQUIERDA 200	TROMPETTE GAUCHE 200	LEFT FLARED TUB 200	RZB-210 (80)	1
36	300033805	RTB-2570-08000	TROMPETA IZQUIERDA 210	TROMPETTE GAUCHE 210	LEFT FLARED TUB 210	RZB-225 (85)	1
36	300033806	RTB-2570-08500	TROMPETA IZQUIERDA 225	TROMPETTE GAUCHE 225	LEFT FLARED TUB 225	RZB-235 (90)	1
36	300034691	RTB-2570-09500	TROMPETA IZQUIERDA 235	TROMPETTE GAUCHE 235	LEFT FLARED TUB 235	RZB-260 (100)	1
36	300034692	RTB-2570-10500	TROMPETA IZQUIERDA 260	TROMPETTE GAUCHE 260	LEFT FLARED TUB 260	RZB-290 (110)	1
36	300034279	RTB-2570-11000	TROMPETA IZQUIERDA 290	TROMPETTE GAUCHE 290	LEFT FLARED TUB 290	RZB-300 (115)	1
36	300034280	RTB-2570-11500	TROMPETA IZQUIERDA 300	TROMPETTE GAUCHE 300	LEFT FLARED TUB 300	RZB-315 (120)	1
37	13300805	M-316-AM	TUERCA ROTOR	ECROU ROTOR	ROTOR NUT		1

RZB-XXX ?F????

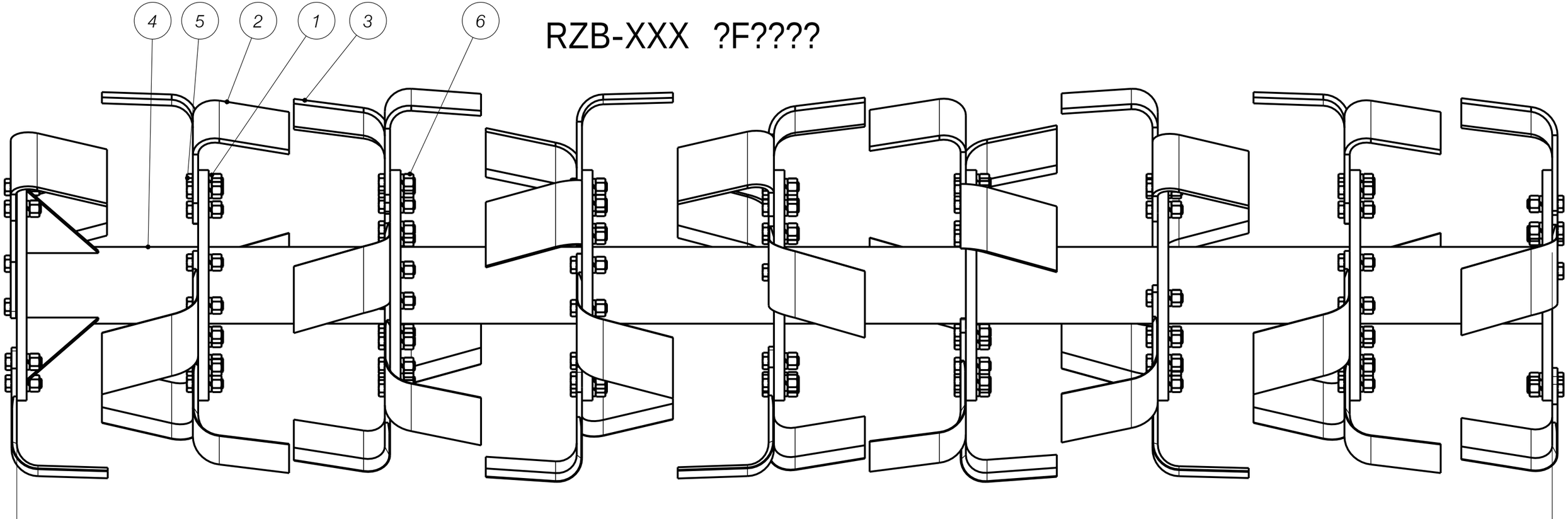

POS.	CODIGO	REFERENCIA	DESCRIPCION	DESIGNATION	DESCRIPTION	MAQ.	CANT.
1	03821507	LAG-0127-I0102	Arandela Grower DIN-127 D.1/2"	Rondelle 1/2"	Grower Washer D127 1/2"	110 (40)	48
						125 (45)	54
						135 (50)	60
						150 (55)	66
						160 (60)	72
						175 (65)	78
						185 (70)	84
						200 (75)	90
						210 (80)	96
						225 (85)	102
						235 (90)	108
						260 (100)	120
						290 (110)	132
						300 (115)	138
						315 (120)	144
2	04500607	325-BM	AZADA DERECHA 501-D	Houe droit	RIGHT BLADE 501-D	110 (40)	12
						125 (45)	15
						135 (50)	15
						150 (55)	18
						160 (60)	18
						175 (65)	21
						185 (70)	21
						200 (75)	24
						210 (80)	24
						225 (85)	27
						235 (90)	27
						260 (100)	30
						290 (110)	30
						300 (115)	33
						315 (120)	33
3	04500500	324-BM	AZADA IZQUIERDA 501-I	Houe gauche	LEFT BLADE 501-I	110 (40)	12
						125 (45)	12
						135 (50)	15
						150 (55)	15
						160 (60)	18
						175 (65)	18
						185 (70)	21
						200 (75)	21
						210 (80)	24
						225 (85)	24
						235 (90)	27
						260 (100)	27
						290 (110)	30
						300 (115)	30
						315 (120)	33

POS.	CODIGO	REFERENCIA	DESCRIPCION	DESIGNATION	DESCRIPTION	MAQ.	CANT.
4	23504507	BM1-3170-04000	ROTOR	Rotor	ROTOR	110 (40)	1
	23504604	BM1-3170-04500				125 (45)	1
	23504701	BM1-3170-05000				135 (50)	1
	23504714	BM1-3170-05500				150 (55)	1
	23504808	BM1-3170-06000				160 (60)	1
	23504811	BM1-3170-06500				175 (65)	1
	23504905	BM1-3170-07000				185 (70)	1
	23505001	BM1-3170-07500				200 (75)	1
	23505108	BM1-3170-08000				210 (80)	1
	23505111	BM1-3170-08500				225 (85)	1
	23505205	BM1-3170-09000				235 (90)	1
	23505302	BM1-3170-10000				260 (100)	1
	23505409	BM1-3170-11000				290 (110)	1
	23505412	BM1-3170-11500				300 (115)	1
	23505506	BM1-3170-12000				315 (120)	1
5	03738300	LTB-N931-I0102	TOR.SAE FINA ESP.1/2X34 D.931	Vis rotor	Screw Rotor	110 (40)	48
						125 (45)	54
						135 (50)	60
						150 (55)	66
						160 (60)	72
						175 (65)	78
						185 (70)	84
						200 (75)	90
						210 (80)	96
						225 (85)	102
						235 (90)	108
						260 (100)	120
						290 (110)	132
						300 (115)	138
						315 (120)	144
6	03771505	LTC-N934-I0102	TUERCA 1/2" SAE FINA ESPECIAL	Ecrou 1/2"	Nut 7/16"	110 (40)	48
						125 (45)	54
						135 (50)	60
						150 (55)	66
						160 (60)	72
						175 (65)	78
						185 (70)	84
						200 (75)	90
						210 (80)	96
						225 (85)	102
						235 (90)	108
						260 (100)	120
						290 (110)	132
						300 (115)	138
						315 (120)	144

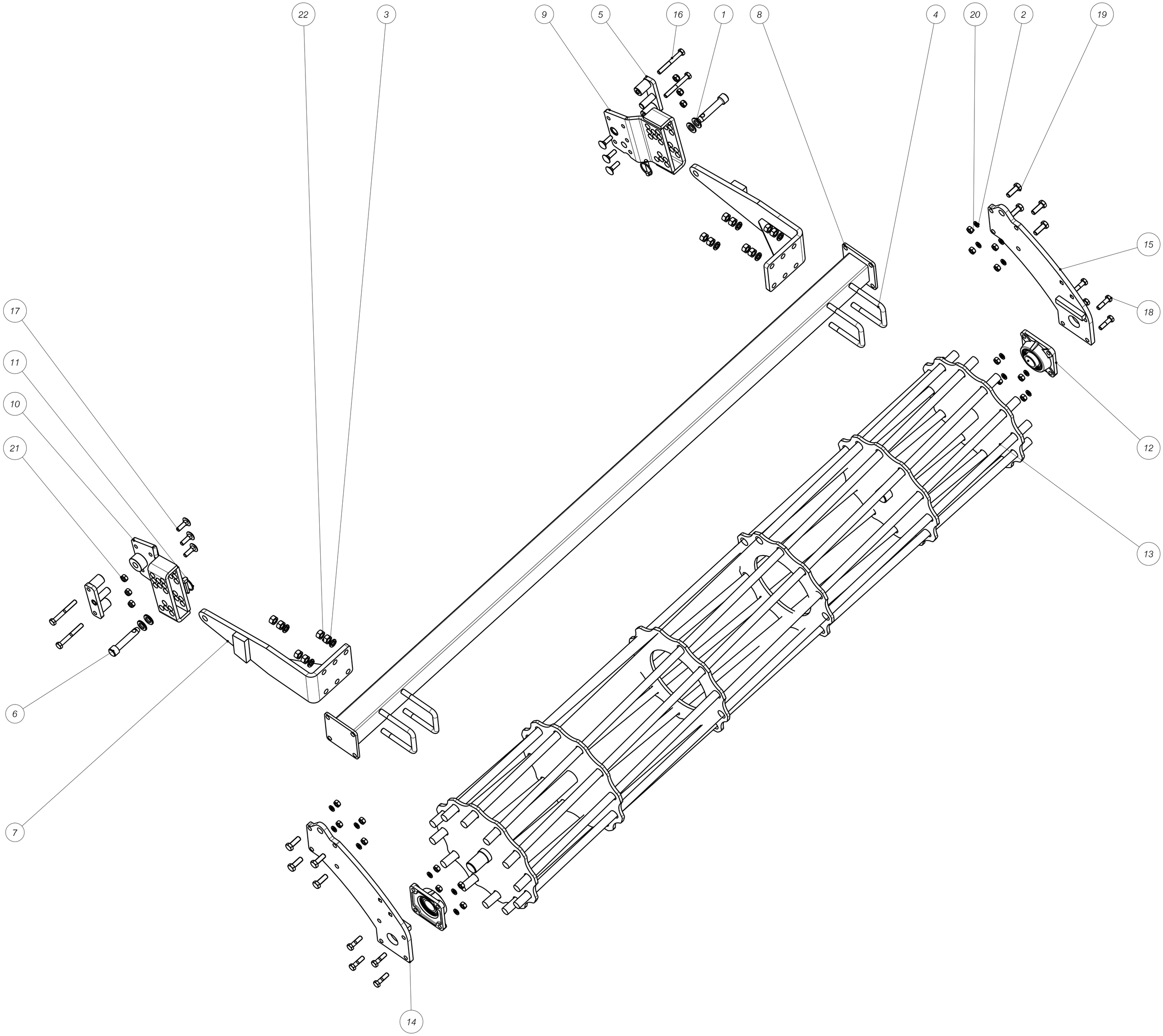
22
3
9
5
16
1
8
4
20
2
19
15
18
17
11
10
21
12
13
6
7
14

POS.	CÓDIGO	REFERENCIA	DESCRIPCIÓN	DESIGNATION	DESCRIPTION	MÁQ.	CANT.
1	03801107	LAP-0125-00020	ARAND.PLANA DIN-125 20 ZBT	RONDELLE PLANE DIN-125 20 ZBT	WASHER PLANE DIN-125 20 ZBT		4
2	03820508	LAG-0127-00012	ARAND.GROWER DIN-127 12 ZBT	RONDELLE GROWER DIN-127 12 ZBT	WASHER GROWER DIN-127 12 ZBT		16
3	03820702	LAG-0127-00016	ARAND.GROWER DIN-127 16 ZBT	RONDELLE GROWER DIN-127 16 ZBT	WASHER GROWER DIN-127 16 ZBT		8
4	200032481	RTB-3420-00000	BRIDA CONJUNTO RODILLO	BRIDE ENSEMBLE ROULEAU	ROLLER FLANGE SET		4
5	300033357	RTB-4780-00000	BULON FIJADOR RODILLO	BOULON FIXEUR ROULEAU	FIXING ROLLER BOLT		2
6	11100102	230-AF	BULON ENGANCHE SUP.	BOULON ATTELAGE SUPERIEUR	COUPLING PIN SUPERIOR		2
7	300032444	RTB-5510-00000	CONJUNTO BRAZO	ENSEMBLE BRAS	ARM SET		2
8	300036728	RTB-5580-04000	CONJUNTO TUBO SOPORTE	ENSEMBLE TUBE SUPPORT	SUPPORT TUBE SET	RTA-110 (40)	1
8	300036729	RTB-5580-04500	CONJUNTO TUBO SOPORTE	ENSEMBLE TUBE SUPPORT	SUPPORT TUBE SET	RTA-125 (45)	1
8	300036730	RTB-5580-05000	CONJUNTO TUBO SOPORTE	ENSEMBLE TUBE SUPPORT	SUPPORT TUBE SET	RZB-135 (50)	1
8	300036731	RTB-5580-05500	CONJUNTO TUBO SOPORTE	ENSEMBLE TUBE SUPPORT	SUPPORT TUBE SET	RZB-150 (55)	1
8	300036732	RTB-5580-06000	CONJUNTO TUBO SOPORTE	ENSEMBLE TUBE SUPPORT	SUPPORT TUBE SET	RZB-160 (60)	1
8	300036733	RTB-5580-06500	CONJUNTO TUBO SOPORTE	ENSEMBLE TUBE SUPPORT	SUPPORT TUBE SET	RZB-175 (65)	1
8	300036734	RTB-5580-07000	CONJUNTO TUBO SOPORTE	ENSEMBLE TUBE SUPPORT	SUPPORT TUBE SET	RZB-185 (70)	1
8	300036735	RTB-5580-07500	CONJUNTO TUBO SOPORTE	ENSEMBLE TUBE SUPPORT	SUPPORT TUBE SET	RZB-200 (75)	1
8	300036736	RTB-5580-08000	CONJUNTO TUBO SOPORTE	ENSEMBLE TUBE SUPPORT	SUPPORT TUBE SET	RZB-210 (80)	1
8	300036737	RTB-5580-08500	CONJUNTO TUBO SOPORTE	ENSEMBLE TUBE SUPPORT	SUPPORT TUBE SET	RZB-225 (85)	1
8	300036738	RTB-5580-09000	CONJUNTO TUBO SOPORTE	ENSEMBLE TUBE SUPPORT	SUPPORT TUBE SET	RZB-235 (90)	1
8	300036740	RTB-5580-10000	CONJUNTO TUBO SOPORTE	ENSEMBLE TUBE SUPPORT	SUPPORT TUBE SET	RZB-260 (100)	1
8	300036742	RTB-5580-11000	CONJUNTO TUBO SOPORTE	ENSEMBLE TUBE SUPPORT	SUPPORT TUBE SET	RZB-290 (110)	1
8	300036743	RTB-5580-11500	CONJUNTO TUBO SOPORTE	ENSEMBLE TUBE SUPPORT	SUPPORT TUBE SET	RZB-300 (115)	1
8	300036744	RTB-5580-12000	CONJUNTO TUBO SOPORTE	ENSEMBLE TUBE SUPPORT	SUPPORT TUBE SET	RZB-315 (120)	1
9	300032792	RTB-4770-00000	GUIA DERECHO	GUIDE DROITE	RIGHT GUIDE		1
10	300032456	RTB-4760-00000	GUIA IZQUIERDA	GUIDE GAUCHE	LEFT GUIDE		1
11	04820105	LPA-ANIL-00011	PDOR.AN.11 (EMB.100) ZBT	GOUPILLE BAGUE (EMB.100)ZBT	RING PIN (EMB.100) ZBT		2
12	03906015	LRD-PCJY-00040	RODCS PCJY-40 (FY40RM)	ROULEMENTS PCJY-40 (FY40RM)	BEARINGS PCJY-40 (FY40RM)		2
13	300038977	BM1-5065-04000	RODILLO BARRAS REFORZADO	ROULEAU BARRES REFORCÉ	REINFORCED BAR ROLLER	RTA-110 (40)	1
13	300039000	BM1-5065-04500	RODILLO BARRAS REFORZADO	ROULEAU BARRES REFORCÉ	REINFORCED BAR ROLLER	RTA-125 (45)	1
13	22108212	BM1-5065-05000	RODILLO BARRAS REFORZADO	ROULEAU BARRES REFORCÉ	REINFORCED BAR ROLLER	RZB-135 (50)	1
13	300039003	BM1-5065-05500	RODILLO BARRAS REFORZADO	ROULEAU BARRES REFORCÉ	REINFORCED BAR ROLLER	RZB-150 (55)	1
13	22108319	BM1-5065-06000	RODILLO BARRAS REFORZADO	ROULEAU BARRES REFORCÉ	REINFORCED BAR ROLLER	RZB-160 (60)	1
13	300039005	BM1-5065-06500	RODILLO BARRAS REFORZADO	ROULEAU BARRES REFORCÉ	REINFORCED BAR ROLLER	RZB-175 (65)	1
13	22108416	BM1-5065-07000	RODILLO BARRAS REFORZADO	ROULEAU BARRES REFORCÉ	REINFORCED BAR ROLLER	RZB-185 (70)	1
13	22108513	BM1-5065-07500	RODILLO BARRAS REFORZADO	ROULEAU BARRES REFORCÉ	REINFORCED BAR ROLLER	RZB-200 (75)	1
13	22108610	BM1-5065-08000	RODILLO BARRAS REFORZADO	ROULEAU BARRES REFORCÉ	REINFORCED BAR ROLLER	RZB-210 (80)	1
13	22108717	BM1-5065-08500	RODILLO BARRAS REFORZADO	ROULEAU BARRES REFORCÉ	REINFORCED BAR ROLLER	RZB-225 (85)	1
13	22108814	BM1-5065-09000	RODILLO BARRAS REFORZADO	ROULEAU BARRES REFORCÉ	REINFORCED BAR ROLLER	RZB-235 (90)	1
13	22109017	BM1-5065-10000	RODILLO BARRAS REFORZADO	ROULEAU BARRES REFORCÉ	REINFORCED BAR ROLLER	RZB-260 (100)	1
13	22109114	BM1-5065-11000	RODILLO BARRAS REFORZADO	ROULEAU BARRES REFORCÉ	REINFORCED BAR ROLLER	RZB-290 (110)	1
13	22109211	BM1-5065-11500	RODILLO BARRAS REFORZADO	ROULEAU BARRES REFORCÉ	REINFORCED BAR ROLLER	RZB-300 (115)	1

13	22109318	BM1-5065-12000	RODILLO BARRAS REFORZADO	ROULEAU BARRES REFORCÉ	REINFORCED BAR ROLLER	RZB-315 (120)	1
14	300036781	RTB-5620-00000	SOP RODILLO DERECHO	SUPORT ROULEAU DROITE	RIGHT ROLLER SUPPORT		1
15	300032478	RTB-5520-00000	SOP RODILLO IZQUIERDO	SUPORT ROULEAU GAUCHE	LEFT ROLLER SUPPORT		1
16	03734728	LTB-8931-10012	TORNI D931 8.8 M12X100 ZBT	VIS D931 8.8 M12X100 ZBT	SCREW D931 8.8 M12X100 ZBT		4
17	03755716	LTB-5603-04012	TORNI D603 5.6 M12X 40 ZBT	VIS D603 5.6 M12X 40 ZBT	SCREW D603 5.6 M12X 40 ZBT		6
18	03734003	LTB-8931-04512	TORNI D931 8.8 M12X 45 ZBT	VIS D933 8.8 M12X 45 ZBT	SCREW D933 8.8 M12X 45 ZBT		8
19	03705300	LTB-8933-04014	TORNI D933 8.8 M14X 40 ZBT	VIS D933 8.8 M14X 40 ZBT	SCREW D933 8.8 M14X 40 ZBT		8
20	03770205	LTC-5934-00012	TUERC D934 5.6 M12 ZBT	ECROU D934 5.6 M12 ZBT	NUT D934 5.6 M12 ZBT		16
21	03780400	LTC-5980-00012	TUERC D980 5.6 M12 ZBT	ECROU D980 5.6 M12 ZBT	NUT D980 5.6 M12 ZBT		6
22	03771408	LTC-5934-15016	TUERC D934 5.6 M16/150 ZBT	ECROU D934 5.6 M16/150 ZBT	NUT D934 5.6 M16/150 ZBT		16

RZB-XXX ??L??? RODILLO LISO

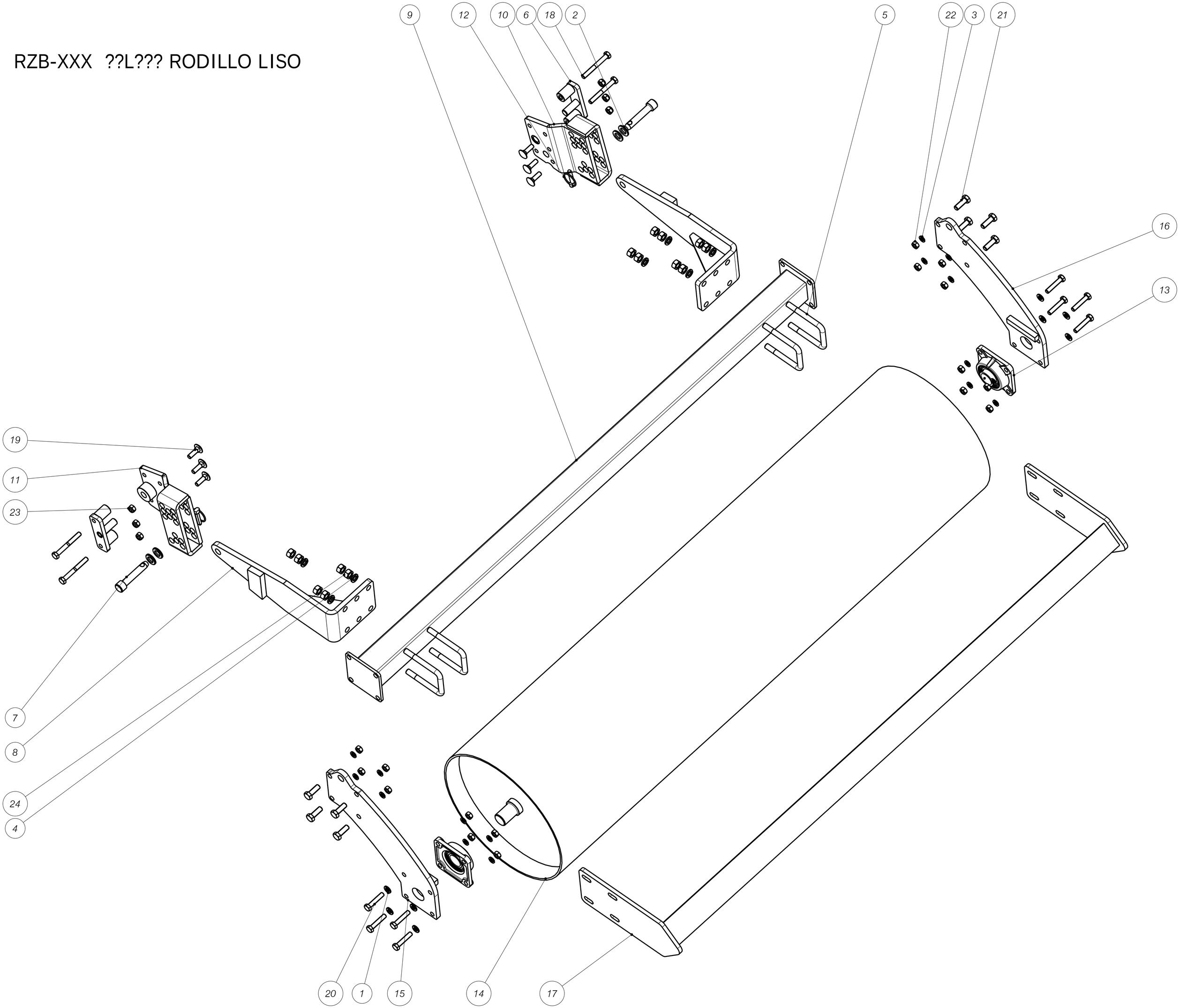

POS.	CÓDIGO	REFERENCIA	DESCRIPCIÓN	DESIGNATION	DESCRIPTION	MÁQ.	CANT.
1	03800700	ARAND.PLANA	DIN-125 12 ZBT	RONDELLE PLANE DIN-125 12 ZBT	WASHER PLANE DIN-125 12 ZBT		8
2	03801107	LAP-0125-00020	ARAND.PLANA DIN-125 20 ZBT	RONDELLE PLANE DIN-125 20 ZBT	WASHER PLANE DIN-125 20 ZBT		4
3	03820508	LAG-0127-00012	ARAND.GROWER DIN-127 12 ZBT	RONDELLE GROWER DIN-127 12 ZBT	WASHER GROWER DIN-127 12 ZBT		16
4	03820702	LAG-0127-00016	ARAND.GROWER DIN-127 16 ZBT	RONDELLE GROWER DIN-127 16 ZBT	WASHER GROWER DIN-127 16 ZBT		8
5	200032481	RTB-3420-00000	BRIDA CONJUNTO RODILLO	BRIDE ENSEMBLE ROULEAU	ROLLER FLANGE SET		4
6	300033357	RTB-4780-00000	BULON FIJADOR RODILLO	BOULON FIXEUR ROULEAU	FIXING ROLLER BOLT		2
7	11100102	230-AF	BULON ENGANCHE SUP.	BOULON ATTELAGE SUPERIEUR	COUPLING PIN SUPERIOR		2
8	300032444	RTB-5510-00000	CONJUNTO BRAZO	ENSEMBLE BRAS	ARM SET		2
9	300036728	RTB-5580-04000	CONJUNTO TUBO SOPORTE	ENSEMBLE TUBE SUPPORT	SUPPORT TUBE SET	RTA-110 (40)	1
9	300036729	RTB-5580-04500	CONJUNTO TUBO SOPORTE	ENSEMBLE TUBE SUPPORT	SUPPORT TUBE SET	RTA-125 (45)	1
9	300036730	RTB-5580-05000	CONJUNTO TUBO SOPORTE	ENSEMBLE TUBE SUPPORT	SUPPORT TUBE SET	RZB-135 (50)	1
9	300036731	RTB-5580-05500	CONJUNTO TUBO SOPORTE	ENSEMBLE TUBE SUPPORT	SUPPORT TUBE SET	RZB-150 (55)	1
9	300036732	RTB-5580-06000	CONJUNTO TUBO SOPORTE	ENSEMBLE TUBE SUPPORT	SUPPORT TUBE SET	RZB-160 (60)	1
9	300036733	RTB-5580-06500	CONJUNTO TUBO SOPORTE	ENSEMBLE TUBE SUPPORT	SUPPORT TUBE SET	RZB-175 (65)	1
9	300036734	RTB-5580-07000	CONJUNTO TUBO SOPORTE	ENSEMBLE TUBE SUPPORT	SUPPORT TUBE SET	RZB-185 (70)	1
9	300036735	RTB-5580-07500	CONJUNTO TUBO SOPORTE	ENSEMBLE TUBE SUPPORT	SUPPORT TUBE SET	RZB-200 (75)	1
9	300036736	RTB-5580-08000	CONJUNTO TUBO SOPORTE	ENSEMBLE TUBE SUPPORT	SUPPORT TUBE SET	RZB-210 (80)	1
9	300036737	RTB-5580-08500	CONJUNTO TUBO SOPORTE	ENSEMBLE TUBE SUPPORT	SUPPORT TUBE SET	RZB-225 (85)	1
9	300036738	RTB-5580-09000	CONJUNTO TUBO SOPORTE	ENSEMBLE TUBE SUPPORT	SUPPORT TUBE SET	RZB-235 (90)	1
9	300036740	RTB-5580-10000	CONJUNTO TUBO SOPORTE	ENSEMBLE TUBE SUPPORT	SUPPORT TUBE SET	RZB-260 (100)	1
9	300036742	RTB-5580-11000	CONJUNTO TUBO SOPORTE	ENSEMBLE TUBE SUPPORT	SUPPORT TUBE SET	RZB-290 (110)	1
9	300036743	RTB-5580-11500	CONJUNTO TUBO SOPORTE	ENSEMBLE TUBE SUPPORT	SUPPORT TUBE SET	RZB-300 (115)	1
9	300036744	RTB-5580-12000	CONJUNTO TUBO SOPORTE	ENSEMBLE TUBE SUPPORT	SUPPORT TUBE SET	RZB-315 (120)	1
10	300032792	RTB-4770-00000	GUIA DERECHO	GUIDE DROITE	RIGHT GUIDE		1
11	300032456	RTB-4760-00000	GUIA IZQUIERDA	GUIDE GAUCHE	LEFT GUIDE		1
12	04820105	LPA-ANIL-00011	PDOR.AN.11 (EMB.100) ZBT	GOUPILLE BAGUE (EMB.100)ZBT	RING PIN (EMB.100) ZBT		2
13	03906015	LRD-PCJY-00040	RODCS PCJY-40 (FY40RM)	ROULEMENTS PCJY-40 (FY40RM)	BEARINGS PCJY-40 (FY40RM)		2
14	300037891	BM1-5061-04000	RODILLO TAMBOR 450	ROULEAU TAMBOUR 452	SLIP ROLLER 452	RTA-110 (40)	1
14	300037892	BM1-5061-04500	RODILLO TAMBOR 450	ROULEAU TAMBOUR 453	SLIP ROLLER 453	RTA-125 (45)	1
14	300037893	BM1-5061-05000	RODILLO TAMBOR 450	ROULEAU TAMBOUR 454	SLIP ROLLER 454	RZB-135 (50)	1
14	300037894	BM1-5061-05500	RODILLO TAMBOR 450	ROULEAU TAMBOUR 455	SLIP ROLLER 455	RZB-150 (55)	1
14	300037895	BM1-5061-06000	RODILLO TAMBOR 450	ROULEAU TAMBOUR 456	SLIP ROLLER 456	RZB-160 (60)	1
14	300037896	BM1-5061-06500	RODILLO TAMBOR 450	ROULEAU TAMBOUR 457	SLIP ROLLER 457	RZB-175 (65)	1
14	30471919	BM1-5061-07000	RODILLO TAMBOR 450	ROULEAU TAMBOUR 458	SLIP ROLLER 458	RZB-185 (70)	1
14	30471922	BM1-5061-07500	RODILLO TAMBOR 450	ROULEAU TAMBOUR 459	SLIP ROLLER 459	RZB-200 (75)	1
14	30472015	BM1-5061-08000	RODILLO TAMBOR 450	ROULEAU TAMBOUR 460	SLIP ROLLER 460	RZB-210 (80)	1
14	30472020	BM1-5061-08500	RODILLO TAMBOR 450	ROULEAU TAMBOUR 461	SLIP ROLLER 461	RZB-225 (85)	1
14	30472112	BM1-5061-09000	RODILLO TAMBOR 450	ROULEAU TAMBOUR 462	SLIP ROLLER 462	RZB-235 (90)	1
14	30472219	BM1-5061-10000	RODILLO TAMBOR 450	ROULEAU TAMBOUR 463	SLIP ROLLER 463	RZB-260 (100)	1
14	30472316	BM1-5061-11000	RODILLO TAMBOR 450	ROULEAU TAMBOUR 464	SLIP ROLLER 464	RZB-290 (110)	1
14	30472320	BM1-5061-11500	RODILLO TAMBOR 450	ROULEAU TAMBOUR 465	SLIP ROLLER 465	RZB-300 (115)	1
14	30472413	BM1-5061-12000	RODILLO TAMBOR 450	ROULEAU TAMBOUR 466	SLIP ROLLER 466	RZB-315 (120)	1

15	300036781	RTB-5620-00000	SOP RODILLO DERECHO	SUPORT ROULEAU DROITE	RIGHT ROLLER SUPPORT		1
16	300032478	RTB-5520-00000	SOP RODILLO IZQUIERDO	SUPORT ROULEAU GAUCHE	LEFT ROLLER SUPPORT		1
17	300037917	BM1-5632-04000	SOPORTE RASCADOR	SUPPORT GRATTOIR	SCRAPER SUPPORTS	RTA-110 (40)	1
17	300037918	BM1-5632-04500	SOPORTE RASCADOR	SUPPORT GRATTOIR	SCRAPER SUPPORTS	RTA-125 (45)	1
17	300037919	BM1-5632-05000	SOPORTE RASCADOR	SUPPORT GRATTOIR	SCRAPER SUPPORTS	RZB-135 (50)	1
17	300037920	BM1-5632-05500	SOPORTE RASCADOR	SUPPORT GRATTOIR	SCRAPER SUPPORTS	RZB-150 (55)	1
17	300037921	BM1-5632-06000	SOPORTE RASCADOR	SUPPORT GRATTOIR	SCRAPER SUPPORTS	RZB-160 (60)	1
17	300037922	BM1-5632-06500	SOPORTE RASCADOR	SUPPORT GRATTOIR	SCRAPER SUPPORTS	RZB-175 (65)	1
17	20484024	BM1-5632-07000	SOPORTE RASCADOR	SUPPORT GRATTOIR	SCRAPER SUPPORTS	RZB-185 (70)	1
17	20484037	BM1-5632-07500	SOPORTE RASCADOR	SUPPORT GRATTOIR	SCRAPER SUPPORTS	RZB-200 (75)	1
17	20484121	BM1-5632-08000	SOPORTE RASCADOR	SUPPORT GRATTOIR	SCRAPER SUPPORTS	RZB-210 (80)	1
17	20484125	BM1-5632-08500	SOPORTE RASCADOR	SUPPORT GRATTOIR	SCRAPER SUPPORTS	RZB-225 (85)	1
17	20484228	BM1-5632-09000	SOPORTE RASCADOR	SUPPORT GRATTOIR	SCRAPER SUPPORTS	RZB-235 (90)	1
17	20484325	BM1-5632-10000	SOPORTE RASCADOR	SUPPORT GRATTOIR	SCRAPER SUPPORTS	RZB-260 (100)	1
17	20484422	BM1-5632-11000	SOPORTE RASCADOR	SUPPORT GRATTOIR	SCRAPER SUPPORTS	RZB-290 (110)	1
17	20484425	BM1-5632-11500	SOPORTE RASCADOR	SUPPORT GRATTOIR	SCRAPER SUPPORTS	RZB-300 (115)	1
17	20484529	BM1-5632-12000	SOPORTE RASCADOR	SUPPORT GRATTOIR	SCRAPER SUPPORTS	RZB-315 (120)	1
18	03734728	LTB-8931-10012	TORNI D931 8.8 M12X100 ZBT	VIS D931 8.8 M12X100 ZBT	SCREW D931 8.8 M12X100 ZBT		4
19	03755716	LTB-5603-04012	TORNI D603 5.6 M12X 40 ZBT	VIS D603 5.6 M12X 40 ZBT	SCREW D603 5.6 M12X 40 ZBT		6
20	03704505	LTB-8933-06012	TORNI D933 8.8 M12X 60 ZBT	VIS D933 8.8 M12X 60 ZBT	SCREW D933 8.8 M12X 60 ZBT		8
21	03705300	LTB-8933-04014	TORNI D933 8.8 M14X 40 ZBT	VIS D933 8.8 M14X 40 ZBT	SCREW D933 8.8 M14X 40 ZBT		8
22	03770205	LTC-5934-00012	TUERC D934 5.6 M12 ZBT	ECROU D934 5.6 M12 ZBT	NUT D934 5.6 M12 ZBT		16
23	03780400	LTC-5980-00012	TUERC D980 5.6 M12 ZBT	ECROU D980 5.6 M12 ZBT	NUT D980 5.6 M12 ZBT		6
24	03771408	LTC-5934-15016	TUERC D934 5.6 M16/150 ZBT	ECROU D934 5.6 M16/150 ZBT	NUT D934 5.6 M16/150 ZBT		16

RZB-XXX ??L??? RODILLO LISO

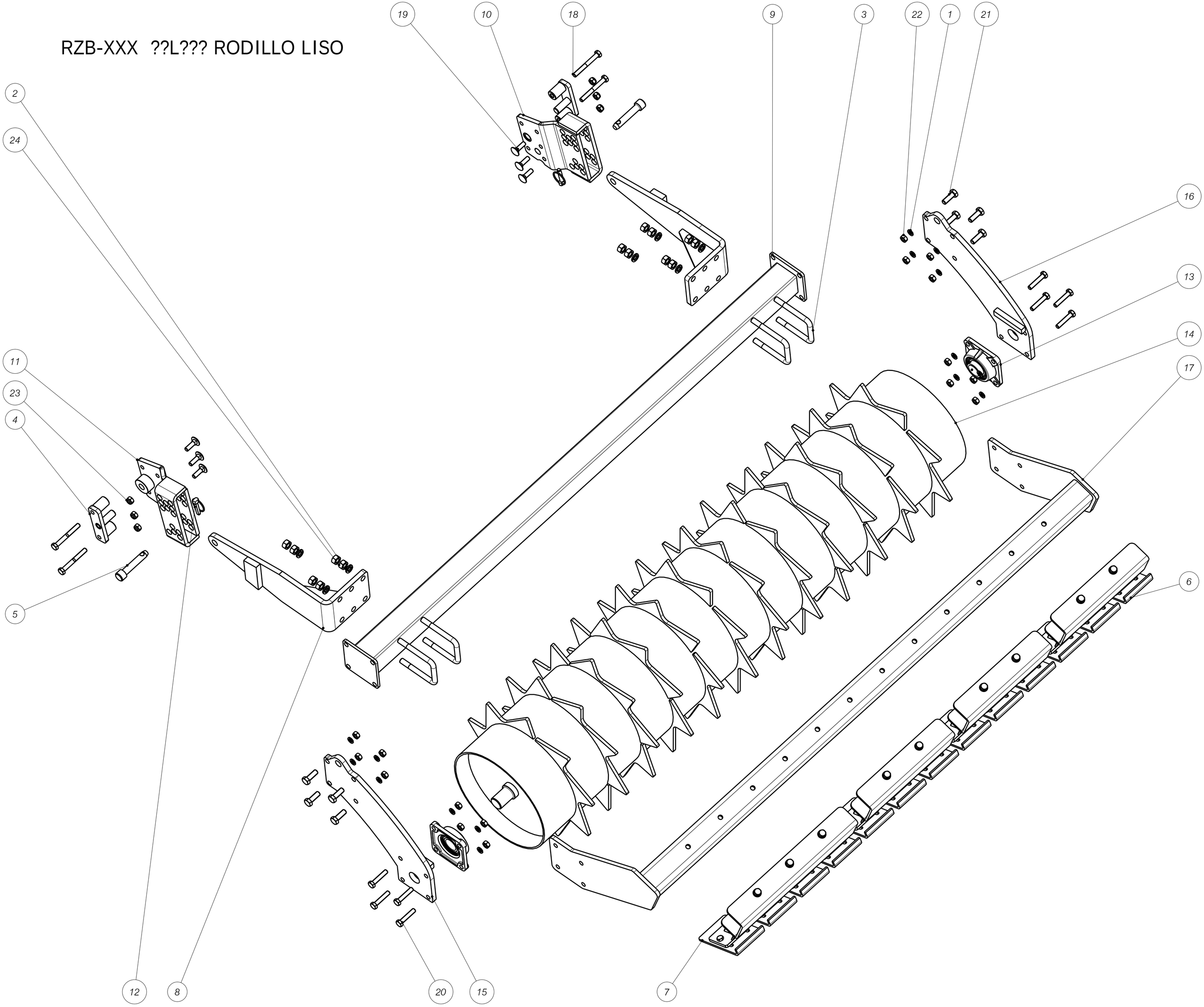

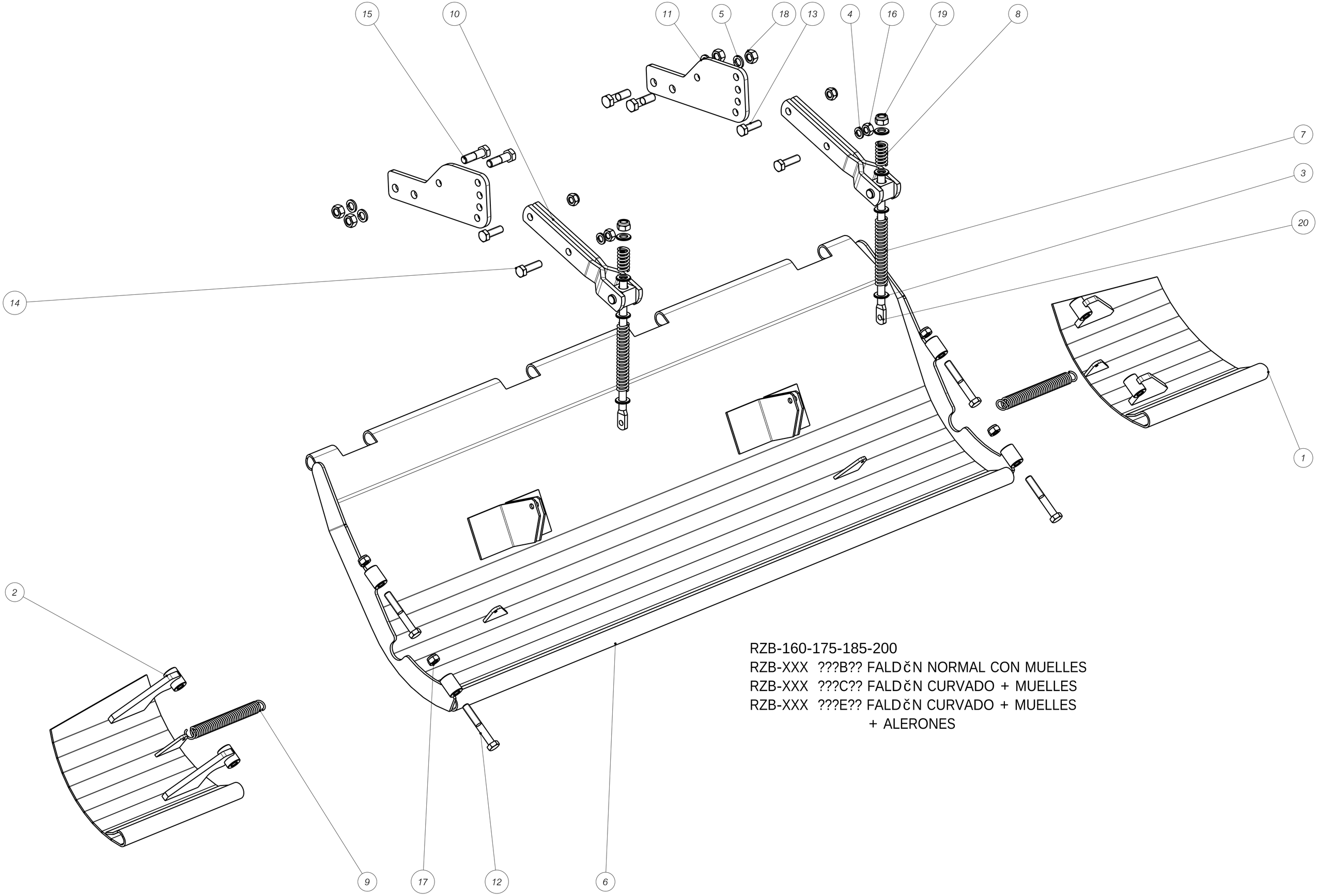

RZB-160-175-185-200
RZB-XXX ???B?? FALDčN NORMAL CON MUELLES
RZB-XXX ???C?? FALDčN CURVADO + MUELLES
RZB-XXX ???E?? FALDčN CURVADO + MUELLES
+ ALERONES

POS.	CÓDIGO	REFERENCIA	DESCRIPCIÓN	DESIGNATION	DESCRIPTION	MÁQ.	CANT.
1	300038180	RTB-5060-00000	ALERON DERECHO	AILERON DROITE	RIGHT WING		1
2	300038159	RTB-5050-00000	ALERON IZQUIERDO	AILERON GAUCHE	LEFT WING		1
3	03800904	LAP-0125-00016	ARAND.PLANA DIN-125 16 ZBT	RONDELLE PLANE DIN-125 16 ZBT	WASHER PLANE DIN-125 16 ZBT		8
4	03820605	LAG-0127-00014	ARAND.GROWER DIN-127 14 ZBT	RONDELLE GROWER DIN-127 14 ZBT	GROWER WASHER DIN-127 14 ZBRT		2
5	03820702	LAG-0127-00016	ARAND.GROWER DIN-127 16 ZBT	RONDELLE GROWER DIN-127 16 ZBT	GROWER WASHER DIN-127 16 ZBRT		4
6	300038232	RTB-4031-04000	FALDON CURVADO	TABLIER CURVÉE	CURVED TRAILING BOARD	RZA-110 (40)	1
6	300038233	RTB-4031-04500	FALDON CURVADO	TABLIER CURVÉE	CURVED TRAILING BOARD	RZA-125 (45)	1
6	300038234	RTB-4031-05000	FALDON CURVADO	TABLIER CURVÉE	CURVED TRAILING BOARD	RZB-135 (50)	1
6	300038235	RTB-4031-05500	FALDON CURVADO	TABLIER CURVÉE	CURVED TRAILING BOARD	RZB-150 (55)	1
6	300038236	RTB-4031-06000	FALDON CURVADO	TABLIER CURVÉE	CURVED TRAILING BOARD	RZB-160 (60)	1
6	300038237	RTB-4031-06500	FALDON CURVADO	TABLIER CURVÉE	CURVED TRAILING BOARD	RZB-175 (65)	1
6	300038238	RTB-4031-07000	FALDON CURVADO	TABLIER CURVÉE	CURVED TRAILING BOARD	RZB-185 (70)	1
6	300038239	RTB-4031-07500	FALDON CURVADO	TABLIER CURVÉE	CURVED TRAILING BOARD	RZB-200 (75)	1
7	04702706	449-BM	MUELLE INFERIOR	RESSORT INFERIEUR	INFERIOR SPRING		2
8	04702803	450-BM	MUELLE SUPERIOR	RESSORT SUPERIEUR	SUPERIOR SPRING		2
9	04701503	20.0169.0.4	MUELLE	RESSORT	SPRING		2
10	20438902	446/2-BM	SOPORTE REGULACION	SUPPORT REGULATION	REGULATION SUPPORT		2
11	100033349	RTB-4450-00000	SOPORTE REGULACIÓN (LASER) (10)	SUPPORT REGULATION (LASER) (10)	REGULATION SUPPORT (LASER) (10)		2
12	03736056	LTB-8931-10014	TORNI D931 8.8 M14X100 ZBT	VIS D931 8.8 M14X 100 ZBT	SCREW D931 8.8 M14X 100 ZBT		4
13	03705407	LTB-8933-04514	TORNI D933 8.8 M14X 45 ZBT	VIS D933 8.8 M14X 45 ZBT	SCREW D933 8.8 M14X 45 ZBT		2
14	03705410	LTB-5933-05014	TORNI D933 5.6 M 14X 50 ZBT	VIS D933 5.6 M14X 50 ZBT	SCREW D933 5.6 M14X 50 ZBT		2
15	03736904	LTB-8931-05516	TORNI D931 8.8 M16X 55 ZBT	VIS D931 8.8 M16X 55 ZBT	SCREW D931 8.8 M16X 55 ZBT		4
16	03770108	LTC-5934-00014	TUERC D934 5.6 M14 ZBT	VIS D933 5.6 M14 ZBT	SCREW D933 5.6 M14 ZBT		2
17	03780507	LTC-5980-00014	TUERC D980 5.6 M14 ZBT	VIS D933 5.6 M14 ZBT	SCREW D933 5.6 M14 ZBT		6
18	03770603	LTC-5934-00016	TUERC D934 5.6 M16 ZBT	VIS D933 5.6 M16 ZBT	SCREW D933 5.6 M16 ZBT		4
19	03780604	LTC-5980-00016	TUERC D980 5.6 M16 ZBT	VIS D933 5.6 M16 ZBT	SCREW D933 5.6 M16 ZBT		2
20	11242907	448/1-BM	VARILLA TENSOR	JAUGE TENSEUR	TENSOR SHAFT		2

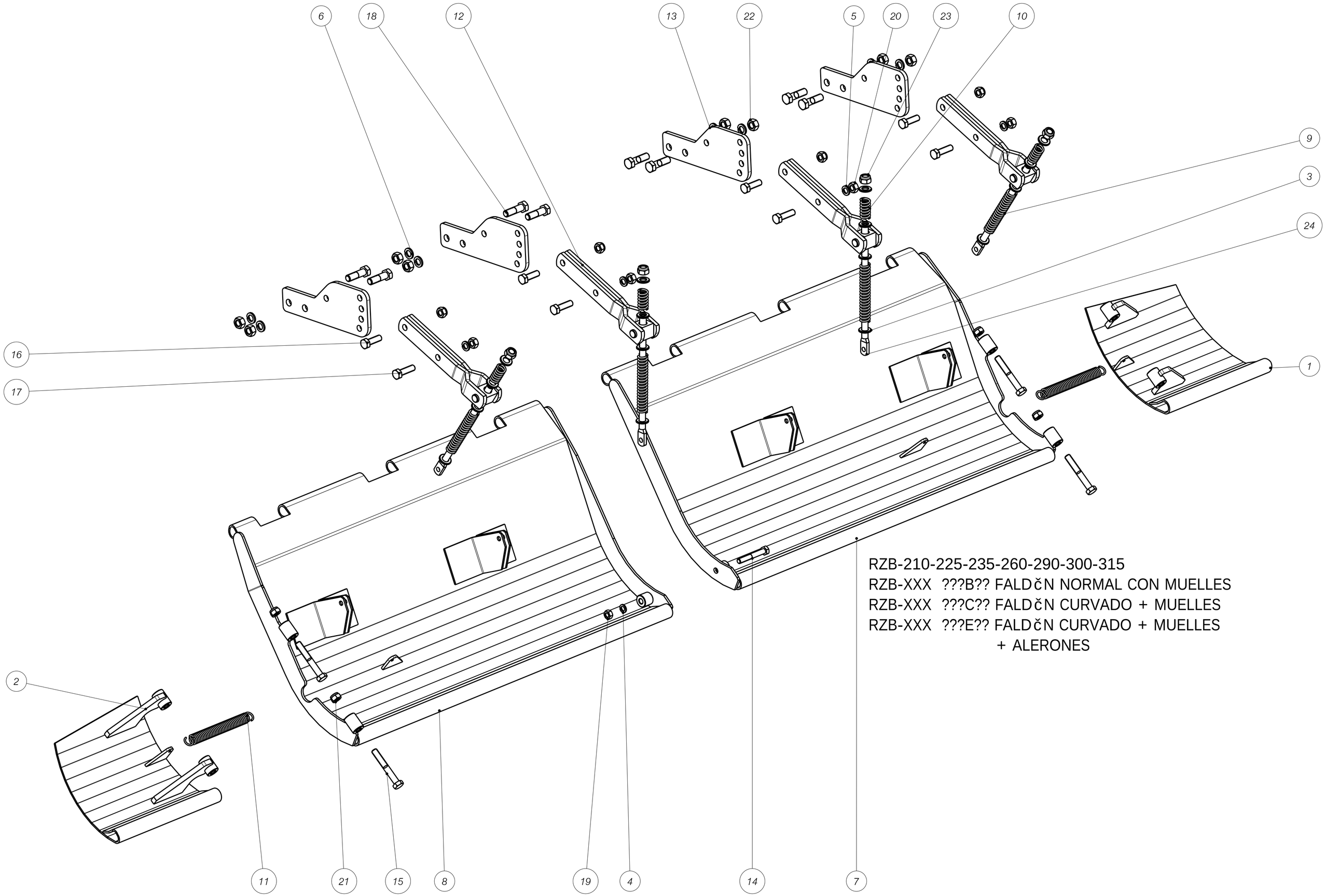

RZB-210-225-235-260-290-300-315
RZB-XXX ???B?? FALDčN NORMAL CON MUELLES
RZB-XXX ???C?? FALDčN CURVADO + MUELLES
RZB-XXX ???E?? FALDčN CURVADO + MUELLES
+ ALERONES

POS.	CÓDIGO	REFERENCIA	DESCRIPCIÓN	DESIGNATION	DESCRIPTION	MÁQ.	CANT.
1	300038180	RTB-5060-00000	ALERON DERECHO	AILERON DROITE	RIGHT WING		1
2	300038159	RTB-5050-00000	ALERON IZQUIERDO	AILERON GAUCHE	LEFT WING		1
3	03800904	LAP-0125-00016	ARAND.PLANA DIN-125 16 ZBT	RONDELLE PLANE DIN-125 16 ZBT	WASHER PLANE DIN-125 16 ZBT		16
4	03820508	LAG-0127-00012	ARAND.GROWER DIN-127 12 ZBT	RONDELLE GROWER DIN-127 12 ZBT	GROWER WASHER DIN-127 12 ZBRT		1
5	03820605	LAG-0127-00014	ARAND.GROWER DIN-127 14 ZBT	RONDELLE GROWER DIN-127 14 ZBT	GROWER WASHER DIN-127 14 ZBRT		4
6	03820702	LAG-0127-00016	ARAND.GROWER DIN-127 16 ZBT	RONDELLE GROWER DIN-127 16 ZBT	GROWER WASHER DIN-127 16 ZBRT		8
7	300038293	RTB-4041-08000	FALDON CURVADO DERECHO	TABLIER CURVÉE DROITE	RIGHT CURVED TRAILING BOARD	RZB-210 (80)	1
7	300038295	RTB-4041-08500	FALDON CURVADO DERECHO	TABLIER CURVÉE DROITE	RIGHT CURVED TRAILING BOARD	RZB-225 (85)	1
7	300038296	RTB-4041-09000	FALDON CURVADO DERECHO	TABLIER CURVÉE DROITE	RIGHT CURVED TRAILING BOARD	RZB-235 (90)	1
7	300038297	RTB-4041-10000	FALDON CURVADO DERECHO	TABLIER CURVÉE DROITE	RIGHT CURVED TRAILING BOARD	RZB-260 (100)	1
7	300038298	RTB-4041-11000	FALDON CURVADO DERECHO	TABLIER CURVÉE DROITE	RIGHT CURVED TRAILING BOARD	RZB-290 (110)	1
7	300038299	RTB-4041-11500	FALDON CURVADO DERECHO	TABLIER CURVÉE DROITE	RIGHT CURVED TRAILING BOARD	RZB-300 (115)	1
7	300038300	RTB-4041-12000	FALDON CURVADO DERECHO	TABLIER CURVÉE DROITE	RIGHT CURVED TRAILING BOARD	RZB-315 (120)	1
8	300038280	RTB-4031-08000	FALDON CURVADO IZQUIERDO	TABLIER CURVÉE GAUCHE	LEFT CURVED TRAILING BOARD	RZB-210 (80)	1
8	300038285	RTB-4031-08500	FALDON CURVADO IZQUIERDO	TABLIER CURVÉE GAUCHE	LEFT CURVED TRAILING BOARD	RZB-225 (85)	1
8	300038286	RTB-4031-09000	FALDON CURVADO IZQUIERDO	TABLIER CURVÉE GAUCHE	LEFT CURVED TRAILING BOARD	RZB-235 (90)	1
8	300038287	RTB-4031-10000	FALDON CURVADO IZQUIERDO	TABLIER CURVÉE GAUCHE	LEFT CURVED TRAILING BOARD	RZB-260 (100)	1
8	300038288	RTB-4031-11000	FALDON CURVADO IZQUIERDO	TABLIER CURVÉE GAUCHE	LEFT CURVED TRAILING BOARD	RZB-290 (110)	1
8	300038289	RTB-4031-11500	FALDON CURVADO IZQUIERDO	TABLIER CURVÉE GAUCHE	LEFT CURVED TRAILING BOARD	RZB-300 (115)	1
8	300038290	RTB-4031-12000	FALDON CURVADO IZQUIERDO	TABLIER CURVÉE GAUCHE	LEFT CURVED TRAILING BOARD	RZB-315 (120)	1
9	04702706	449-BM	MUELLE INFERIOR	RESSORT INFERIEUR	INFERIOR SPRING		4
10	04702803	450-BM	MUELLE SUPERIOR	RESSORT SUPERIEUR	SUPERIOR SPRING		4
11	04701503	20.0169.0.4	MUELLE	RESSORT	SPRING		2
12	20438902	446/2-BM	SOPORTE REGULACION	SUPPORT REGULATION	REGULATION SUPPORT		4
13	100033349	RTB-4450-00000	SOPORTE REGULACIÓN (LASER) (10)	SUPPORT REGULATION (LASER) (10)	REGULATION SUPPORT (LASER) (10)		4
14	03734605	LTB-8931-09012	TORNI D931 8.8 M12X 90 ZBT	VIS D931 8.8 M12X 90 ZBT	SCREW D931 8.8 M12X 90 ZBT		1
15	03736056	LTB-8931-10014	TORNI D931 8.8 M14X100 ZBT	VIS D931 8.8 M14X 100 ZBT	SCREW D931 8.8 M14X 100 ZBT		4
16	03705407	LTB-8933-04514	TORNI D933 8.8 M14X 45 ZBT	VIS D933 8.8 M14X 45 ZBT	SCREW D933 8.8 M14X 45 ZBT		4
17	03705410	LTB-5933-05014	TORNI D933 5.6 M 14X 50 ZBT	VIS D933 5.6 M14X 50 ZBT	SCREW D933 5.6 M14X 50 ZBT		4
18	03736904	LTB-8931-05516	TORNI D931 8.8 M16X 55 ZBT	VIS D931 8.8 M16X 55 ZBT	SCREW D931 8.8 M16X 55 ZBT		8
19	03770205	LTC-5934-00012	TUERC D934 5.6 M12 ZBT	VIS D933 5.6 M12 ZBT	SCREW D933 5.6 M12 ZBT		1
20	03770108	LTC-5934-00014	TUERC D934 5.6 M14 ZBT	VIS D933 5.6 M14 ZBT	SCREW D933 5.6 M14 ZBT		4
21	03780507	LTC-5980-00014	TUERC D980 5.6 M14 ZBT	VIS D933 5.6 M14 ZBT	SCREW D933 5.6 M14 ZBT		8
22	03770603	LTC-5934-00016	TUERC D934 5.6 M16 ZBT	VIS D933 5.6 M16 ZBT	SCREW D933 5.6 M16 ZBT		8
23	03780604	LTC-5980-00016	TUERC D980 5.6 M16 ZBT	VIS D933 5.6 M16 ZBT	SCREW D933 5.6 M16 ZBT		4
24	11242907	448/1-BM	VARILLA TENSOR	JAUGE TENSEUR	TENSOR SHAFT		4

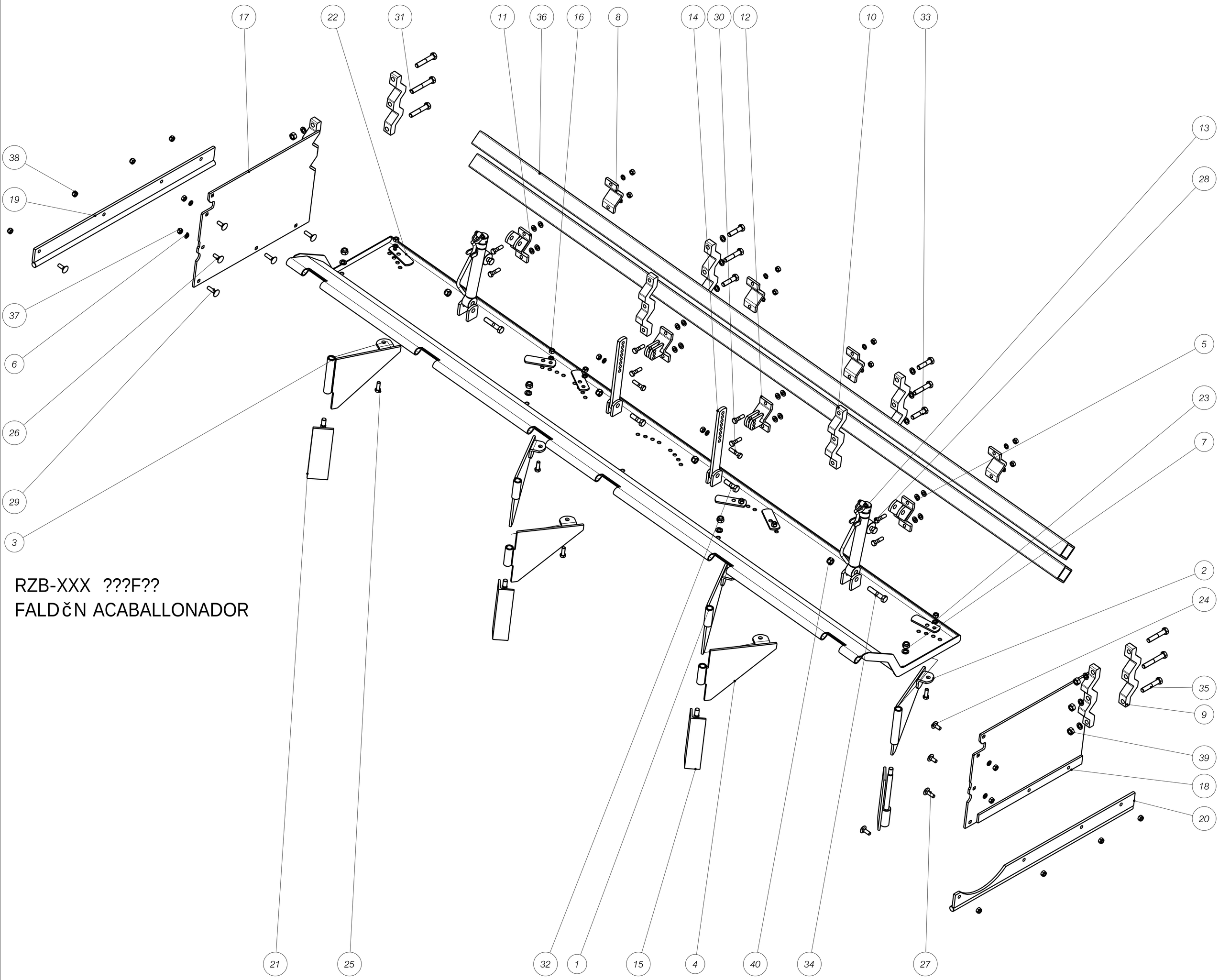

RZB-XXX ???F??
FALDčN ACABALLONADOR